Bore B and approx. weight by pipe schedule

Schedule	B, in (mm)	CS lb (kg)	SS lb (kg)
Sch 5S / Sch 5	15.670 (398.0)	125 (56.8)	128 (57.9)
Sch 10S	15.624 (396.8)	127 (57.6)	129 (58.7)
Sch 10	15.500 (393.7)	131 (59.6)	134 (60.7)
Sch 20	15.376 (390.6)	136 (61.6)	138 (62.8)
Sch 30 / Sch 40S / STD	15.250 (387.4)	140 (63.6)	143 (64.8)
Sch 40 / Sch 80S / XS	15.000 (381.0)	149 (67.6)	152 (68.9)
Sch 60	14.688 (373.1)	160 (72.4)	163 (73.8)
Sch 80	14.312 (363.5)	172 (78.2)	176 (79.6)
Sch 100	13.938 (354.0)	185 (83.7)	188 (85.3)
Sch 120	13.562 (344.5)	196 (89.1)	200 (90.8)
Sch 140	13.124 (333.3)	210 (95.2)	214 (97.1)
Sch 160	12.812 (325.4)	219 (99.5)	224 (101)

B = A - 2 x pipe wall (ASME B36.10M and B36.19M).
CS carbon steel, 7.85 g/cm3. SS stainless steel 316L, 8.0 g/cm3; 304L (7.9 g/cm3) weighs about 1% less.
Calculated from the dimensions as the standard gives them, with no allowance for tolerance.

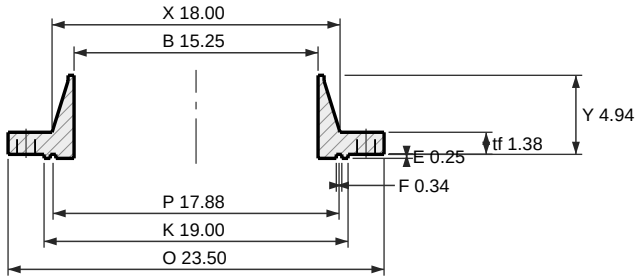

Section

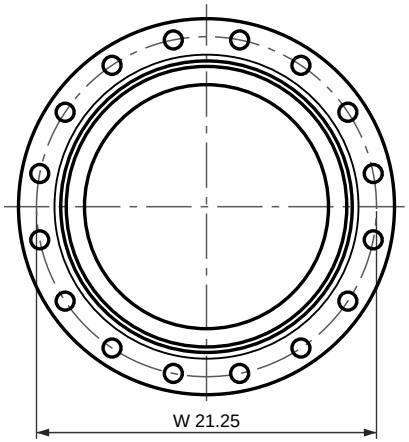

16 holes Ø1.12
Face view

Weld neck flange, ASME B16.5 Class 150 RJ

NPS 16 (DN 400)

Dimensions per ASME B16.5-2025, inches and millimetres as the standard's own tables give them.
Ring joint facing to ASME B16.5 Table 5, ring and groove number R64. The raised portion stands E above the flange, the same as the depth of the groove, so the bottom of the groove is level with the flange face. Ring joint gasket dimensions are to ASME B16.20 (clause 6.11.1).
tf and Y are the ASME B16.5 dimension, measured without the raised portion; the tf + E and Y + E rows are the same flange measured over the facing.
Bore B to suit the pipe schedule: see the table. Other walls to order.
Reference drawing. The purchase order and ASME B16.5 govern. Check the latest edition.
Generated at rajendradatacenter.us/flanges/ring-type-joint/

Dimension	in	mm
O Outside diameter	23.50	597
K Diameter of the raised portion	19.00	483
E Depth of the groove, and the raised portion	0.25	6.35
P Pitch diameter of the groove	17.88	454.02
F Width of the groove	0.34	8.74
r Radius at the bottom of the groove	0.03	0.8
tf Thickness (min), without the raised portion	1.38	35.1
tf + E Thickness over the raised portion	1.63	41.5
Y Length through hub, without the raised portion	4.94	125
Y + E Length through hub, over the raised portion	5.19	131.4
X Hub diameter at base	18.00	457
A Hub diameter at weld end (pipe OD)	16.00	406.4
W Bolt circle diameter	21.25	539.8
h Bolt holes, 16 off	1.12	28.6

16 stud bolts of 1 in; holes 1.12 in (28.6 mm)

RAJENDRA INDUSTRIAL CORPORATION
rajendradatacenter.us
Drawing RIC-B165-WN150RJ-16
Scale 1:12 on Letter
Units: inches (mm)
Date 2026-11-22
Quote: rajendradatacenter.us/rfq/
sales@rajendradatacenter.com
+91 74338 71355