### Bore B and approx. weight by pipe schedule

| Schedule | B, in (mm) | CS lb (kg) | SS lb (kg) |
|---|---|---|---|
| Sch 5S / Sch 5 | 19.624 (498.4) | 765 (347) | 780 (354) |
| Sch 10S | 19.564 (496.9) | 771 (350) | 785 (356) |
| Sch 10 | 19.500 (495.3) | 776 (352) | 791 (359) |
| Sch 20 / Sch 40S / STD | 19.250 (489.0) | 798 (362) | 813 (369) |
| Sch 30 / Sch 80S / XS | 19.000 (482.6) | 819 (372) | 835 (379) |
| Sch 40 | 18.812 (477.8) | 835 (379) | 851 (386) |
| Sch 60 | 18.376 (466.8) | 871 (395) | 888 (403) |
| Sch 80 | 17.938 (455.6) | 907 (411) | 924 (419) |
| Sch 100 | 17.438 (442.9) | 946 (429) | 964 (437) |
| Sch 120 | 17.000 (431.8) | 980 (444) | 998 (453) |
| Sch 140 | 16.500 (419.1) | 1017 (461) | 1036 (470) |
| Sch 160 | 16.062 (408.0) | 1049 (476) | 1069 (485) |

B = A - 2 x pipe wall (ASME B36.10M and B36.19M).
CS carbon steel, 7.85 g/cm3. SS stainless steel 316L, 8.0 g/cm3; 304L (7.9 g/cm3) weighs about 1% less.
Calculated from the dimensions as the standard gives them, with no allowance for tolerance.

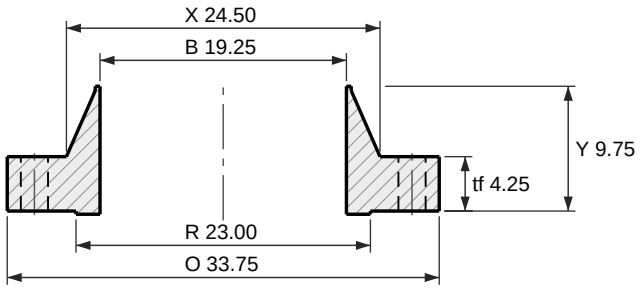

Section

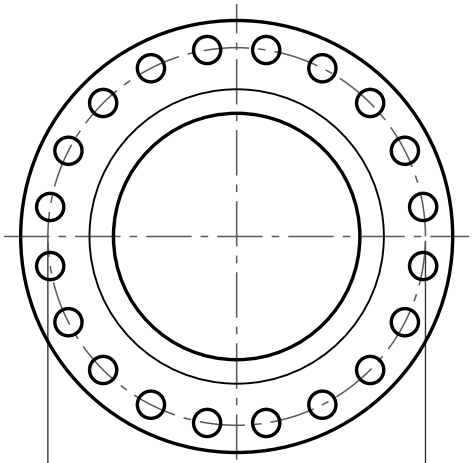

20 holes Ø2.12
Face view

# Weld neck flange, ASME B16.5 Class 900 RF

NPS 20 (DN 500)

Dimensions per ASME B16.5-2025, inches and millimetres as the standard's own tables give them.
tf and Y are the ASME B16.5 dimension, measured without the 0.25 in (6.4 mm) raised face; the tf + f and Y + f rows are the same flange measured over the face, which is what most catalogs print.
Bore B to suit the pipe schedule: see the table. Other walls to order.
Reference drawing. The purchase order and ASME B16.5 govern. Check the latest edition.
Generated at rajendradatacenter.us/flanges/high-pressure/

| Dimension | in | mm |
|---|---|---|
| O Outside diameter | 33.75 | 857 |
| R Raised face diameter | 23.00 | 584.2 |
| f Raised face height | 0.25 | 6.4 |
| tf Thickness (min), without raised face | 4.25 | 108 |
| tf + f Thickness over the raised face | 4.50 | 114.4 |
| Y Length through hub, without raised face | 9.75 | 248 |
| Y + f Length through hub, over the raised face | 10.00 | 254.4 |
| X Hub diameter at base | 24.50 | 622 |
| A Hub diameter at weld end (pipe OD) | 20.00 | 508 |
| W Bolt circle diameter | 29.50 | 749.3 |
| h Bolt holes, 20 off | 2.12 | 54.0 |

20 stud bolts of 2 in; holes 2.12 in (54.0 mm)

RAJENDRA INDUSTRIAL CORPORATION
rajendradatacenter.us
Drawing RIC-B165-WN900-20
Scale 1:15 on Letter
Units: inches (mm)
Date 2026-11-22
Quote: rajendradatacenter.us/rfq/
sales@rajendradatacenter.com
+91 74338 71355