Bore B and approx. weight by pipe schedule

Schedule	B, in (mm)	CS lb (kg)	SS lb (kg)
Sch 5S / Sch 5	15.670 (398.0)	450 (204)	459 (208)
Sch 10S	15.624 (396.8)	453 (205)	461 (209)
Sch 10	15.500 (393.7)	460 (209)	469 (213)
Sch 20	15.376 (390.6)	468 (212)	477 (216)
Sch 30 / Sch 40S / STD	15.250 (387.4)	475 (216)	484 (220)
Sch 40 / Sch 80S / XS	15.000 (381.0)	490 (222)	499 (227)
Sch 60	14.688 (373.1)	508 (230)	518 (235)
Sch 80	14.312 (363.5)	529 (240)	539 (245)
Sch 100	13.938 (354.0)	550 (249)	560 (254)
Sch 120	13.562 (344.5)	570 (259)	581 (264)
Sch 140	13.124 (333.3)	593 (269)	604 (274)
Sch 160	12.812 (325.4)	609 (276)	620 (281)

B = A - 2 x pipe wall (ASME B36.10M and B36.19M).
CS carbon steel, 7.85 g/cm3. SS stainless steel 316L, 8.0 g/cm3; 304L (7.9 g/cm3) weighs about 1% less.
Calculated from the dimensions as the standard gives them, with no allowance for tolerance.

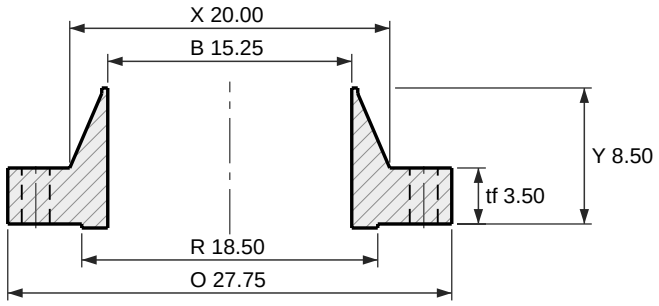

Section

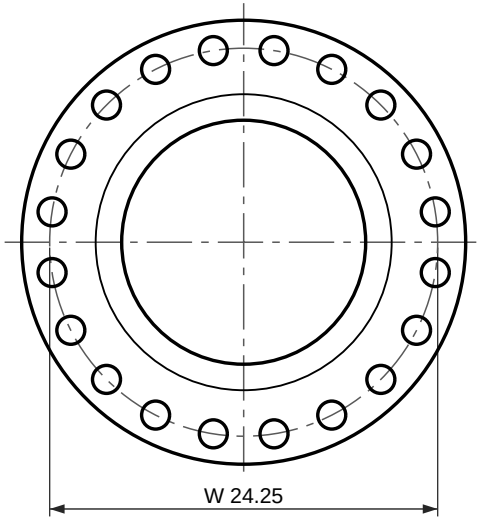

20 holes Ø1.75
Face view

Weld neck flange, ASME B16.5 Class 900 RF

NPS 16 (DN 400)

Dimensions per ASME B16.5-2025, inches and millimetres as the standard's own tables give them.
tf and Y are the ASME B16.5 dimension, measured without the 0.25 in (6.4 mm) raised face; the tf + f and Y + f rows are the same flange measured over the face, which is what most catalogs print.
Bore B to suit the pipe schedule: see the table. Other walls to order.
Reference drawing. The purchase order and ASME B16.5 govern. Check the latest edition.
Generated at rajendradatacenter.us/flanges/high-pressure/

Dimension	in	mm
O Outside diameter	27.75	705
R Raised face diameter	18.50	469.9
f Raised face height	0.25	6.4
tf Thickness (min), without raised face	3.50	88.9
tf + f Thickness over the raised face	3.75	95.3
Y Length through hub, without raised face	8.50	216
Y + f Length through hub, over the raised face	8.75	222.4
X Hub diameter at base	20.00	508
A Hub diameter at weld end (pipe OD)	16.00	406.4
W Bolt circle diameter	24.25	616
h Bolt holes, 20 off	1.75	44.5

20 stud bolts of 1-5/8 in; holes 1.75 in (44.5 mm)

RAJENDRA INDUSTRIAL CORPORATION
rajendradatacenter.us
Drawing RIC-B165-WN900-16
Scale 1:12 on Letter
Units: inches (mm)
Date 2026-11-22
Quote: rajendradatacenter.us/rfq/
sales@rajendradatacenter.com
+91 74338 71355