Bore B and approx. weight by pipe schedule

Schedule	B, in (mm)	CS lb (kg)	SS lb (kg)
Sch 5S / Sch 5	10.482 (266.2)	244 (111)	249 (113)
Sch 10S / Sch 10	10.420 (264.7)	246 (112)	251 (114)
Sch 20	10.250 (260.4)	252 (114)	257 (117)
Sch 30	10.136 (257.5)	256 (116)	261 (118)
Sch 40S / STD / Sch 40	10.020 (254.5)	260 (118)	265 (120)
Sch 60 / Sch 80S / XS	9.750 (247.7)	269 (122)	274 (124)
Sch 80	9.562 (242.9)	275 (125)	280 (127)
Sch 100	9.312 (236.5)	283 (128)	288 (131)
Sch 120	9.062 (230.2)	290 (132)	296 (134)
Sch 140 / XXS	8.750 (222.3)	300 (136)	305 (139)
Sch 160	8.500 (215.9)	307 (139)	313 (142)

B = A - 2 x pipe wall (ASME B36.10M and B36.19M).
CS carbon steel, 7.85 g/cm3. SS stainless steel 316L, 8.0 g/cm3; 304L (7.9 g/cm3) weighs about 1% less.
Calculated from the dimensions as the standard gives them, with no allowance for tolerance.

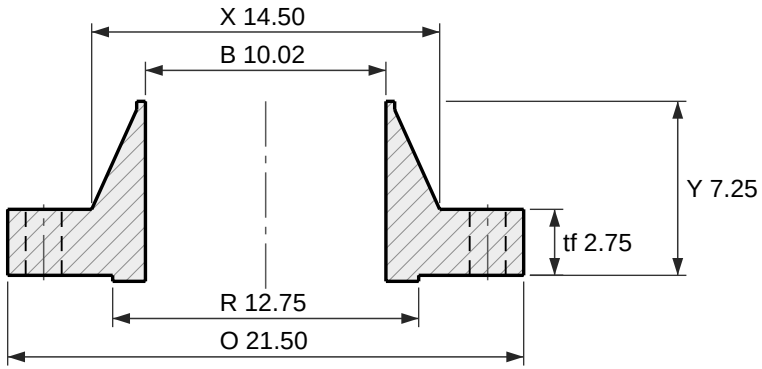

Section

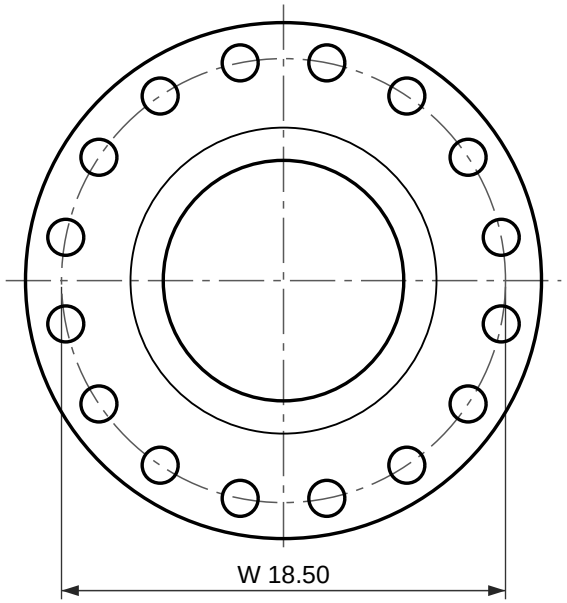

16 holes Ø1.50
Face view

Weld neck flange, ASME B16.5 Class 900 RF

NPS 10 (DN 250)

Dimensions per ASME B16.5-2025, inches and millimetres as the standard's own tables give them.
tf and Y are the ASME B16.5 dimension, measured without the 0.25 in (6.4 mm) raised face; the tf + f and Y + f rows are the same flange measured over the face, which is what most catalogs print.
Bore B to suit the pipe schedule: see the table. Other walls to order.
Reference drawing. The purchase order and ASME B16.5 govern. Check the latest edition.
Generated at rajendradatacenter.us/flanges/high-pressure/

Dimension	in	mm
O Outside diameter	21.50	546
R Raised face diameter	12.75	323.8
f Raised face height	0.25	6.4
tf Thickness (min), without raised face	2.75	69.8
tf + f Thickness over the raised face	3.00	76.2
Y Length through hub, without raised face	7.25	184
Y + f Length through hub, over the raised face	7.50	190.4
X Hub diameter at base	14.50	368
A Hub diameter at weld end (pipe OD)	10.75	273
W Bolt circle diameter	18.50	469.9
h Bolt holes, 16 off	1.50	38.1

16 stud bolts of 1-3/8 in; holes 1.50 in (38.1 mm)

RAJENDRA INDUSTRIAL CORPORATION
rajendradatacenter.us
Drawing RIC-B165-WN900-10
Scale 1:8 on Letter
Units: inches (mm)
Date 2026-11-22
Quote: rajendradatacenter.us/rfq/
sales@rajendradatacenter.com
+91 74338 71355