Bore B and approx. weight by pipe schedule

Schedule	B, in (mm)	CS lb (kg)	SS lb (kg)
Sch 5S / Sch 5	0.710 (18.0)	4.1 (1.8)	4.1 (1.9)
Sch 10S / Sch 10	0.674 (17.1)	4.1 (1.9)	4.2 (1.9)
Sch 30	0.650 (16.5)	4.1 (1.9)	4.2 (1.9)
Sch 40S / STD / Sch 40	0.622 (15.8)	4.1 (1.9)	4.2 (1.9)
Sch 80S / XS / Sch 80	0.546 (13.9)	4.2 (1.9)	4.3 (1.9)
Sch 160	0.464 (11.8)	4.2 (1.9)	4.3 (2.0)
XXS	0.252 (6.4)	4.3 (2.0)	4.4 (2.0)

B = A - 2 x pipe wall (ASME B36.10M and B36.19M).
CS carbon steel, 7.85 g/cm3. SS stainless steel 316L, 8.0 g/cm3; 304L (7.9 g/cm3) weighs about 1% less.
Calculated from the dimensions as the standard gives them, with no allowance for tolerance.

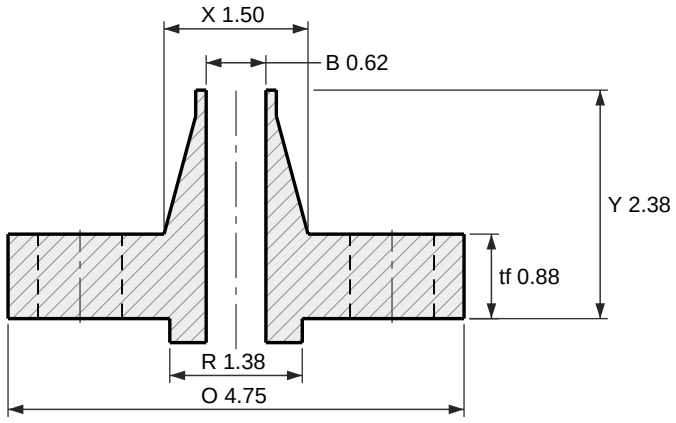

Section

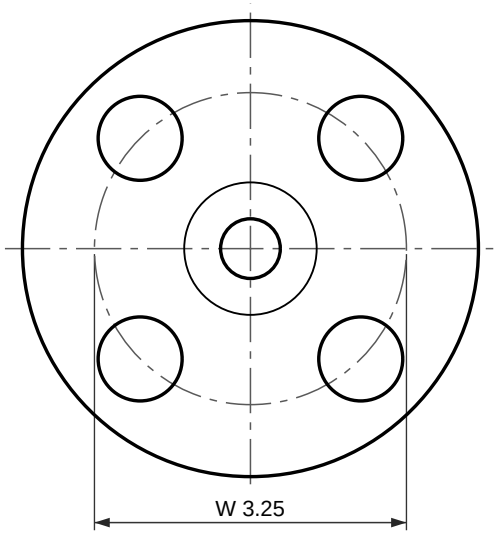

4 holes Ø0.88
Face view

Weld neck flange, ASME B16.5 Class 900 RF

NPS 1/2 (DN 15)

Dimensions per ASME B16.5-2025, inches and millimetres as the standard's own tables give them. Note 5 of the Class 900 table: use the Class 1500 dimensions in this size.
tf and Y are the ASME B16.5 dimension, measured without the 0.25 in (6.4 mm) raised face; the tf + f and Y + f rows are the same flange measured over the face, which is what most catalogs print.
Bore B to suit the pipe schedule: see the table. Other walls to order.
ASME B16.5 gives Class 900 the same dimensions as Class 1500 in NPS 1/2; only the marking differs.
Reference drawing. The purchase order and ASME B16.5 govern. Check the latest edition.
Generated at rajendradatacenter.us/flanges/high-pressure/

Dimension	in	mm
O Outside diameter	4.75	121
R Raised face diameter	1.38	35.1
f Raised face height	0.25	6.4
tf Thickness (min), without raised face	0.88	22.4
tf + f Thickness over the raised face	1.13	28.8
Y Length through hub, without raised face	2.38	60
Y + f Length through hub, over the raised face	2.63	66.4
X Hub diameter at base	1.50	38
A Hub diameter at weld end (pipe OD)	0.84	21.3
W Bolt circle diameter	3.25	82.6
h Bolt holes, 4 off	0.88	22.2

4 stud bolts of 3/4 in; holes 0.88 in (22.2 mm)

RAJENDRA INDUSTRIAL CORPORATION
rajendradatacenter.us
Drawing RIC-B165-WN900-0.5
Scale 1:2 on Letter
Units: inches (mm)
Date 2026-11-22
Quote: rajendradatacenter.us/rfq/
sales@rajendradatacenter.com
+91 74338 71355