Bore B and approx. weight by pipe schedule

Schedule	B, in (mm)	CS lb (kg)	SS lb (kg)
Sch 5S / Sch 5	1.770 (45.0)	12.5 (5.7)	12.8 (5.8)
Sch 10S / Sch 10	1.682 (42.7)	12.8 (5.8)	13.0 (5.9)
Sch 30	1.650 (41.9)	12.9 (5.8)	13.1 (5.9)
Sch 40S / STD / Sch 40	1.610 (40.9)	13.0 (5.9)	13.2 (6.0)
Sch 80S / XS / Sch 80	1.500 (38.1)	13.2 (6.0)	13.5 (6.1)
Sch 160	1.338 (34.0)	13.6 (6.2)	13.8 (6.3)
XXS	1.100 (27.9)	14.0 (6.4)	14.3 (6.5)

B = A - 2 x pipe wall (ASME B36.10M and B36.19M).
CS carbon steel, 7.85 g/cm3. SS stainless steel 316L, 8.0 g/cm3; 304L (7.9 g/cm3) weighs about 1% less.
Calculated from the dimensions as the standard gives them, with no allowance for tolerance.

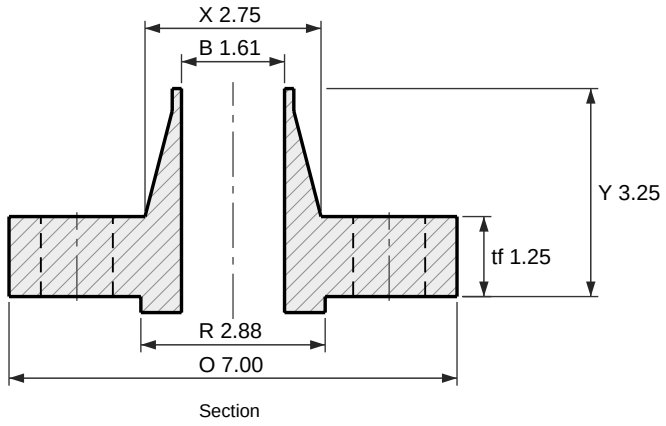

Section

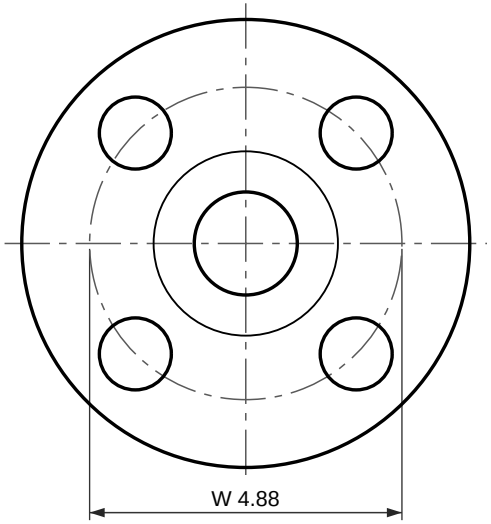

4 holes Ø1.12
Face view

Weld neck flange, ASME B16.5 Class 900 RF

NPS 1-1/2 (DN 40)

Dimensions per ASME B16.5-2025, inches and millimetres as the standard's own tables give them. Note 5 of the Class 900 table: use the Class 1500 dimensions in this size.
tf and Y are the ASME B16.5 dimension, measured without the 0.25 in (6.4 mm) raised face; the tf + f and Y + f rows are the same flange measured over the face, which is what most catalogs print.
Bore B to suit the pipe schedule: see the table. Other walls to order.
ASME B16.5 gives Class 900 the same dimensions as Class 1500 in NPS 1-1/2; only the marking differs.
Reference drawing. The purchase order and ASME B16.5 govern. Check the latest edition.
Generated at rajendradatacenter.us/flanges/high-pressure/

Dimension	in	mm
O Outside diameter	7.00	178
R Raised face diameter	2.88	73
f Raised face height	0.25	6.4
tf Thickness (min), without raised face	1.25	31.8
tf + f Thickness over the raised face	1.50	38.2
Y Length through hub, without raised face	3.25	83
Y + f Length through hub, over the raised face	3.50	89.4
X Hub diameter at base	2.75	70
A Hub diameter at weld end (pipe OD)	1.90	48.3
W Bolt circle diameter	4.88	124
h Bolt holes, 4 off	1.12	28.6

4 stud bolts of 1 in; holes 1.12 in (28.6 mm)

RAJENDRA INDUSTRIAL CORPORATION
rajendradatacenter.us
Drawing RIC-B165-WN900-1.5
Scale 1:3 on Letter
Units: inches (mm)
Date 2026-11-22
Quote: rajendradatacenter.us/rfq/
sales@rajendradatacenter.com
+91 74338 71355