Bore B and approx. weight by pipe schedule

Schedule	B, in (mm)	CS lb (kg)	SS lb (kg)
Sch 5S / Sch 5	19.624 (498.4)	367 (167)	374 (170)
Sch 10S	19.564 (496.9)	371 (168)	378 (172)
Sch 10	19.500 (495.3)	375 (170)	382 (173)
Sch 20 / Sch 40S / STD	19.250 (489.0)	390 (177)	397 (180)
Sch 30 / Sch 80S / XS	19.000 (482.6)	404 (183)	412 (187)
Sch 40	18.812 (477.8)	415 (188)	423 (192)
Sch 60	18.376 (466.8)	440 (200)	448 (203)
Sch 80	17.938 (455.6)	464 (211)	473 (215)
Sch 100	17.438 (442.9)	491 (223)	501 (227)
Sch 120	17.000 (431.8)	514 (233)	524 (238)
Sch 140	16.500 (419.1)	540 (245)	550 (250)
Sch 160	16.062 (408.0)	562 (255)	573 (260)

B = A - 2 x pipe wall (ASME B36.10M and B36.19M).
CS carbon steel, 7.85 g/cm3. SS stainless steel 316L, 8.0 g/cm3; 304L (7.9 g/cm3) weighs about 1% less.
Calculated from the dimensions as the standard gives them, with no allowance for tolerance.

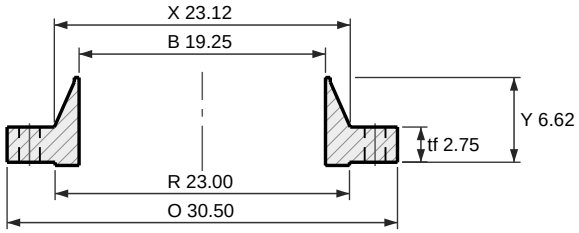

Section

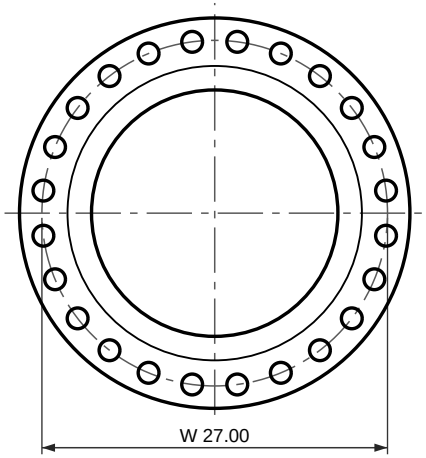

24 holes Ø1.62
Face view

Weld neck flange, ASME B16.5 Class 400 RF

NPS 20 (DN 500)

Dimensions per ASME B16.5-2025, inches and millimetres as the standard's own tables give them.
tf and Y are the ASME B16.5 dimension, measured without the 0.25 in (6.4 mm) raised face; the tf + f and Y + f rows are the same flange measured over the face, which is what most catalogs print.
Bore B to suit the pipe schedule: see the table. Other walls to order.
Reference drawing. The purchase order and ASME B16.5 govern. Check the latest edition.
Generated at rajendradatacenter.us/flanges/high-pressure/

Dimension	in	mm
O Outside diameter	30.50	775
R Raised face diameter	23.00	584.2
f Raised face height	0.25	6.4
tf Thickness (min), without raised face	2.75	69.8
tf + f Thickness over the raised face	3.00	76.2
Y Length through hub, without raised face	6.62	168
Y + f Length through hub, over the raised face	6.87	174.4
X Hub diameter at base	23.12	587
A Hub diameter at weld end (pipe OD)	20.00	508
W Bolt circle diameter	27.00	685.8
h Bolt holes, 24 off	1.62	41.3

24 stud bolts of 1-1/2 in; holes 1.62 in (41.3 mm)

RAJENDRA INDUSTRIAL CORPORATION
rajendradatacenter.us
Drawing RIC-B165-WN400-20
Scale 1:15 on Letter
Units: inches (mm)
Date 2026-11-22
Quote: rajendradatacenter.us/rfq/
sales@rajendradatacenter.com
+91 74338 71355