Bore B and approx. weight by pipe schedule

Schedule	B, in (mm)	CS lb (kg)	SS lb (kg)
Sch 5S / Sch 5	2.709 (68.8)	12.9 (5.8)	13.1 (6.0)
Sch 10S / Sch 10	2.635 (66.9)	13.2 (6.0)	13.4 (6.1)
Sch 30	2.499 (63.5)	13.7 (6.2)	14.0 (6.3)
Sch 40S / STD / Sch 40	2.469 (62.7)	13.8 (6.3)	14.1 (6.4)
Sch 80S / XS / Sch 80	2.323 (59.0)	14.3 (6.5)	14.6 (6.6)
Sch 160	2.125 (54.0)	15.0 (6.8)	15.3 (6.9)
XXS	1.771 (45.0)	16.0 (7.3)	16.3 (7.4)

B = A - 2 x pipe wall (ASME B36.10M and B36.19M).
CS carbon steel, 7.85 g/cm3. SS stainless steel 316L, 8.0 g/cm3; 304L (7.9 g/cm3) weighs about 1% less.
Calculated from the dimensions as the standard gives them, with no allowance for tolerance.

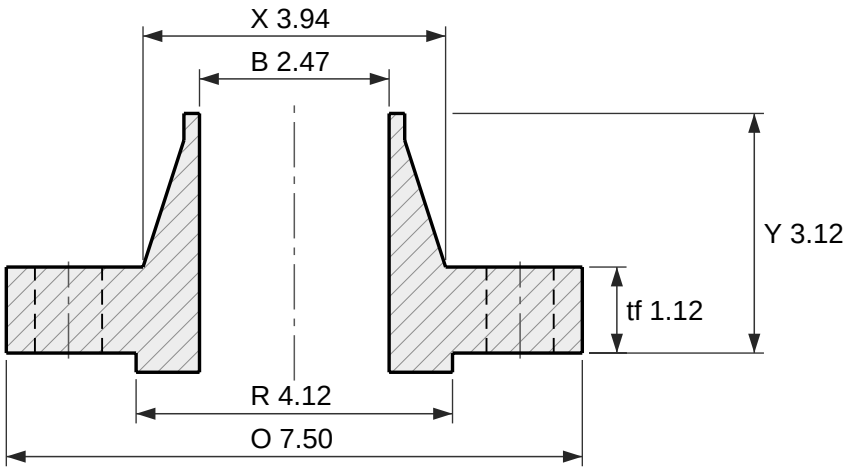

Section

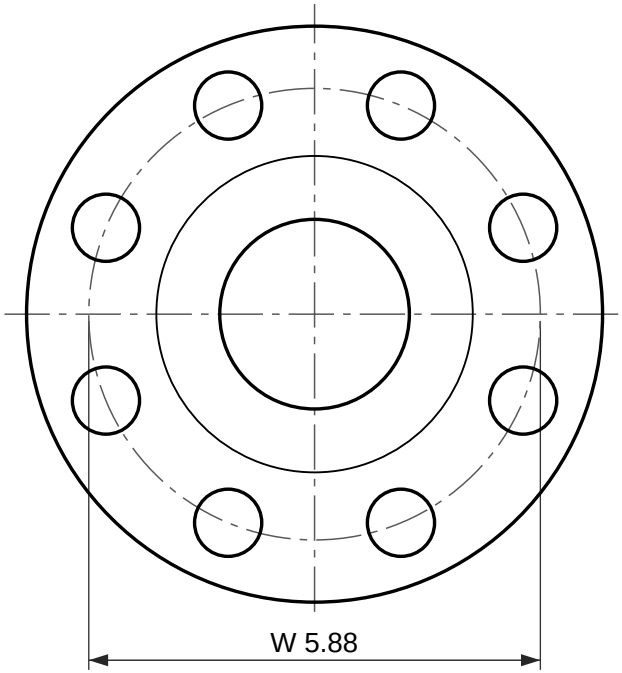

8 holes Ø0.88
Face view

Weld neck flange, ASME B16.5 Class 400 RF

NPS 2-1/2 (DN 65)

Dimensions per ASME B16.5-2025, inches and millimetres as the standard's own tables give them. Note 5 of the Class 400 table: use the Class 600 dimensions in this size.
tf and Y are the ASME B16.5 dimension, measured without the 0.25 in (6.4 mm) raised face; the tf + f and Y + f rows are the same flange measured over the face, which is what most catalogs print.
Bore B to suit the pipe schedule: see the table. Other walls to order.
ASME B16.5 gives Class 400 the same dimensions as Class 600 in NPS 2-1/2; only the marking differs.
Reference drawing. The purchase order and ASME B16.5 govern. Check the latest edition.
Generated at rajendradatacenter.us/flanges/high-pressure/

Dimension	in	mm
O Outside diameter	7.50	190
R Raised face diameter	4.12	104.6
f Raised face height	0.25	6.4
tf Thickness (min), without raised face	1.12	28.4
tf + f Thickness over the raised face	1.37	34.8
Y Length through hub, without raised face	3.12	79
Y + f Length through hub, over the raised face	3.37	85.4
X Hub diameter at base	3.94	100
A Hub diameter at weld end (pipe OD)	2.88	73.2
W Bolt circle diameter	5.88	149.4
h Bolt holes, 8 off	0.88	22.2

8 stud bolts of 3/4 in; holes 0.88 in (22.2 mm)

RAJENDRA INDUSTRIAL CORPORATION
rajendradatacenter.us
Drawing RIC-B165-WN400-2.5
Scale 1:2.5 on Letter
Units: inches (mm)
Date 2026-11-22
Quote: rajendradatacenter.us/rfq/
sales@rajendradatacenter.com
+91 74338 71355