### Bore B and approx. weight by pipe schedule

| Schedule | B, in (mm) | CS lb (kg) | SS lb (kg) |
|---|---|---|---|
| Sch 5S / Sch 5 | 15.670 (398.0) | 250 (113) | 254 (115) |
| Sch 10S | 15.624 (396.8) | 252 (114) | 256 (116) |
| Sch 10 | 15.500 (393.7) | 257 (117) | 262 (119) |
| Sch 20 | 15.376 (390.6) | 262 (119) | 267 (121) |
| Sch 30 / Sch 40S / STD | 15.250 (387.4) | 268 (121) | 273 (124) |
| Sch 40 / Sch 80S / XS | 15.000 (381.0) | 278 (126) | 284 (129) |
| Sch 60 | 14.688 (373.1) | 291 (132) | 297 (135) |
| Sch 80 | 14.312 (363.5) | 306 (139) | 312 (142) |
| Sch 100 | 13.938 (354.0) | 321 (146) | 327 (148) |
| Sch 120 | 13.562 (344.5) | 335 (152) | 342 (155) |
| Sch 140 | 13.124 (333.3) | 352 (160) | 358 (163) |
| Sch 160 | 12.812 (325.4) | 363 (165) | 370 (168) |

B = A - 2 x pipe wall (ASME B36.10M and B36.19M).
CS carbon steel, 7.85 g/cm3. SS stainless steel 316L, 8.0 g/cm3; 304L (7.9 g/cm3) weighs about 1% less.
Calculated from the dimensions as the standard gives them, with no allowance for tolerance.

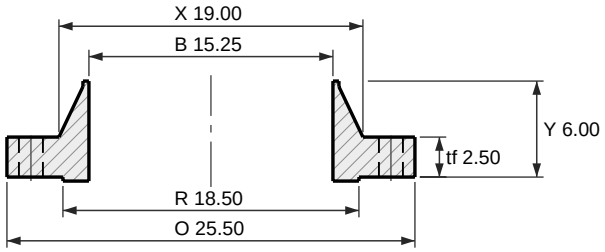

Section

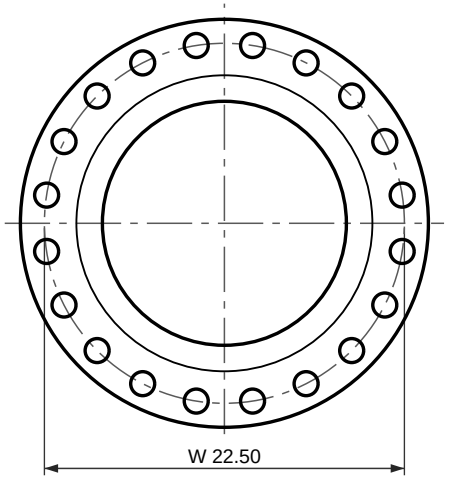

20 holes Ø1.50
Face view

# Weld neck flange, ASME B16.5 Class 400 RF

NPS 16 (DN 400)

Dimensions per ASME B16.5-2025, inches and millimetres as the standard's own tables give them.
tf and Y are the ASME B16.5 dimension, measured without the 0.25 in (6.4 mm) raised face; the tf + f and Y + f rows are the same flange measured over the face, which is what most catalogs print.
Bore B to suit the pipe schedule: see the table. Other walls to order.
Reference drawing. The purchase order and ASME B16.5 govern. Check the latest edition.
Generated at rajendradatacenter.us/flanges/high-pressure/

| Dimension | in | mm |
|---|---|---|
| O Outside diameter | 25.50 | 648 |
| R Raised face diameter | 18.50 | 469.9 |
| f Raised face height | 0.25 | 6.4 |
| tf Thickness (min), without raised face | 2.50 | 63.5 |
| tf + f Thickness over the raised face | 2.75 | 69.9 |
| Y Length through hub, without raised face | 6.00 | 152 |
| Y + f Length through hub, over the raised face | 6.25 | 158.4 |
| X Hub diameter at base | 19.00 | 483 |
| A Hub diameter at weld end (pipe OD) | 16.00 | 406.4 |
| W Bolt circle diameter | 22.50 | 571.5 |
| h Bolt holes, 20 off | 1.50 | 38.1 |

20 stud bolts of 1-3/8 in; holes 1.50 in (38.1 mm)

RAJENDRA INDUSTRIAL CORPORATION
rajendradatacenter.us
Drawing RIC-B165-WN400-16
Scale 1:12 on Letter
Units: inches (mm)
Date 2026-11-22
Quote: rajendradatacenter.us/rfq/
sales@rajendradatacenter.com
+91 74338 71355