Bore B and approx. weight by pipe schedule

Schedule	B, in (mm)	CS lb (kg)	SS lb (kg)
Sch 5S / Sch 5	2.709 (68.8)	50.3 (22.8)	51.2 (23.2)
Sch 10S / Sch 10	2.635 (66.9)	50.8 (23.0)	51.8 (23.5)
Sch 30	2.499 (63.5)	51.7 (23.5)	52.7 (23.9)
Sch 40S / STD / Sch 40	2.469 (62.7)	51.9 (23.5)	52.9 (24.0)
Sch 80S / XS / Sch 80	2.323 (59.0)	52.8 (24.0)	53.8 (24.4)
Sch 160	2.125 (54.0)	54.0 (24.5)	55.0 (24.9)
XXS	1.771 (45.0)	55.8 (25.3)	56.8 (25.8)

B = A - 2 x pipe wall (ASME B36.10M and B36.19M).
CS carbon steel, 7.85 g/cm3. SS stainless steel 316L, 8.0 g/cm3; 304L (7.9 g/cm3) weighs about 1% less.
Calculated from the dimensions as the standard gives them, with no allowance for tolerance.

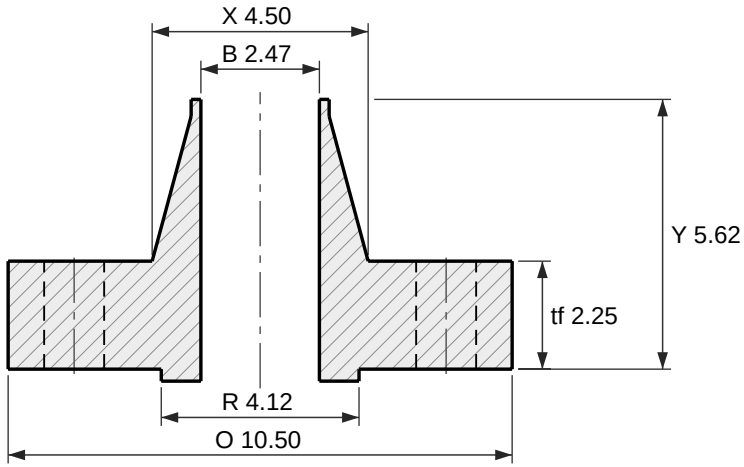

Section

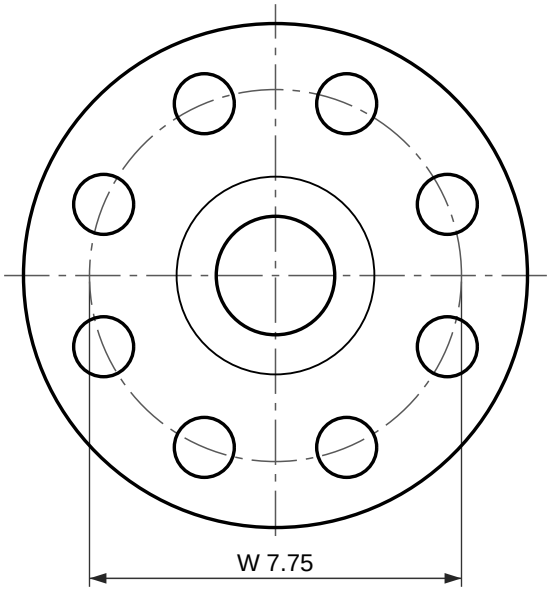

8 holes Ø1.25
Face view

Weld neck flange, ASME B16.5 Class 2500 RF

NPS 2-1/2 (DN 65)

Dimensions per ASME B16.5-2025, inches and millimetres as the standard's own tables give them.
tf and Y are the ASME B16.5 dimension, measured without the 0.25 in (6.4 mm) raised face; the tf + f and Y + f rows are the same flange measured over the face, which is what most catalogs print.
Bore B to suit the pipe schedule: see the table. Other walls to order.
Reference drawing. The purchase order and ASME B16.5 govern. Check the latest edition.
Generated at rajendradatacenter.us/flanges/high-pressure/

Dimension	in	mm
O Outside diameter	10.50	267
R Raised face diameter	4.12	104.6
f Raised face height	0.25	6.4
tf Thickness (min), without raised face	2.25	57.2
tf + f Thickness over the raised face	2.50	63.6
Y Length through hub, without raised face	5.62	143
Y + f Length through hub, over the raised face	5.87	149.4
X Hub diameter at base	4.50	114
A Hub diameter at weld end (pipe OD)	2.88	73.2
W Bolt circle diameter	7.75	196.8
h Bolt holes, 8 off	1.25	31.8

8 stud bolts of 1-1/8 in; holes 1.25 in (31.8 mm)

RAJENDRA INDUSTRIAL CORPORATION
rajendradatacenter.us
Drawing RIC-B165-WN2500-2.5
Scale 1:4 on Letter
Units: inches (mm)
Date 2026-11-22
Quote: rajendradatacenter.us/rfq/
sales@rajendradatacenter.com
+91 74338 71355