Bore B and approx. weight by pipe schedule

Schedule	B, in (mm)	CS lb (kg)	SS lb (kg)
Sch 5S / Sch 5	12.438 (315.9)	1224 (555)	1247 (566)
Sch 10S / Sch 10	12.390 (314.7)	1228 (557)	1252 (568)
Sch 20	12.250 (311.2)	1243 (564)	1266 (574)
Sch 30	12.090 (307.1)	1259 (571)	1283 (582)
Sch 40S / STD	12.000 (304.8)	1268 (575)	1292 (586)
Sch 40	11.938 (303.2)	1274 (578)	1298 (589)
Sch 80S / XS	11.750 (298.5)	1292 (586)	1317 (597)
Sch 60	11.626 (295.3)	1304 (592)	1329 (603)
Sch 80	11.374 (288.9)	1328 (602)	1353 (614)
Sch 100	11.062 (281.0)	1357 (615)	1383 (627)
Sch 120 / XXS	10.750 (273.1)	1385 (628)	1411 (640)
Sch 140	10.500 (266.7)	1407 (638)	1434 (650)
Sch 160	10.126 (257.2)	1438 (652)	1466 (665)

B = A - 2 x pipe wall (ASME B36.10M and B36.19M).
CS carbon steel, 7.85 g/cm3. SS stainless steel 316L, 8.0 g/cm3; 304L (7.9 g/cm3) weighs about 1% less.
Calculated from the dimensions as the standard gives them, with no allowance for tolerance.

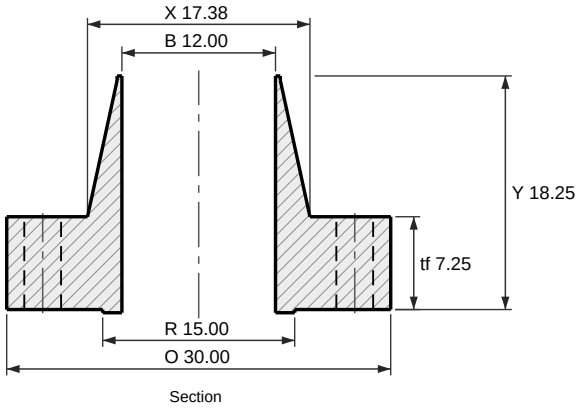

Section

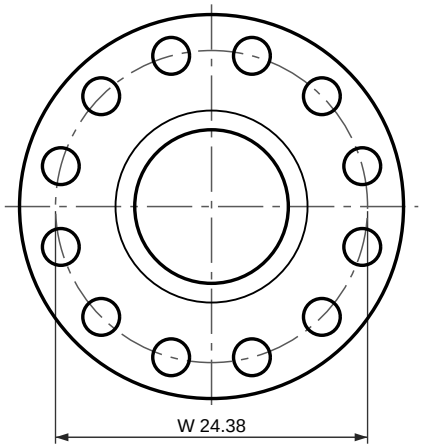

12 holes Ø2.88
Face view

Weld neck flange, ASME B16.5 Class 2500 RF

NPS 12 (DN 300)

Dimensions per ASME B16.5-2025, inches and millimetres as the standard's own tables give them.
tf and Y are the ASME B16.5 dimension, measured without the 0.25 in (6.4 mm) raised face; the tf + f and Y + f rows are the same flange measured over the face, which is what most catalogs print.
Bore B to suit the pipe schedule: see the table. Other walls to order.
Reference drawing. The purchase order and ASME B16.5 govern. Check the latest edition.
Generated at rajendradatacenter.us/flanges/high-pressure/

Dimension	in	mm
O Outside diameter	30.00	762
R Raised face diameter	15.00	381
f Raised face height	0.25	6.4
tf Thickness (min), without raised face	7.25	184.2
tf + f Thickness over the raised face	7.50	190.6
Y Length through hub, without raised face	18.25	464
Y + f Length through hub, over the raised face	18.50	470.4
X Hub diameter at base	17.38	441
A Hub diameter at weld end (pipe OD)	12.75	323.8
W Bolt circle diameter	24.38	619.3
h Bolt holes, 12 off	2.88	73.0

12 stud bolts of 2-3/4 in; holes 2.88 in (73.0 mm)

RAJENDRA INDUSTRIAL CORPORATION
rajendradatacenter.us
Drawing RIC-B165-WN2500-12
Scale 1:15 on Letter
Units: inches (mm)
Date 2026-11-22
Quote: rajendradatacenter.us/rfq/
sales@rajendradatacenter.com
+91 74338 71355