Bore B and approx. weight by pipe schedule

Schedule	B, in (mm)	CS lb (kg)	SS lb (kg)
Sch 5S / Sch 5	1.770 (45.0)	23.3 (10.6)	23.7 (10.8)
Sch 10S / Sch 10	1.682 (42.7)	23.6 (10.7)	24.0 (10.9)
Sch 30	1.650 (41.9)	23.7 (10.8)	24.2 (11.0)
Sch 40S / STD / Sch 40	1.610 (40.9)	23.8 (10.8)	24.3 (11.0)
Sch 80S / XS / Sch 80	1.500 (38.1)	24.2 (11.0)	24.7 (11.2)
Sch 160	1.338 (34.0)	24.7 (11.2)	25.1 (11.4)
XXS	1.100 (27.9)	25.3 (11.5)	25.8 (11.7)

B = A - 2 x pipe wall (ASME B36.10M and B36.19M).
CS carbon steel, 7.85 g/cm3. SS stainless steel 316L, 8.0 g/cm3; 304L (7.9 g/cm3) weighs about 1% less.
Calculated from the dimensions as the standard gives them, with no allowance for tolerance.

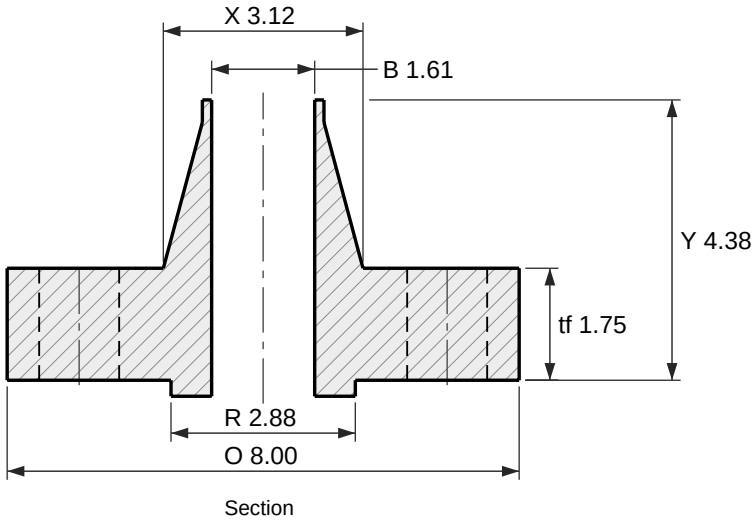

Section

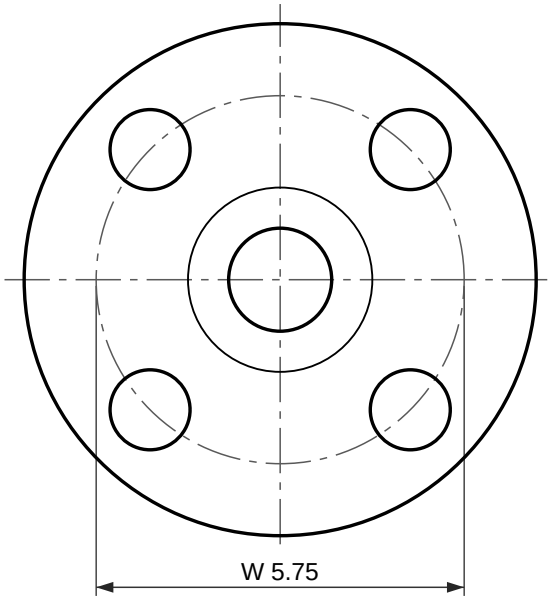

4 holes Ø1.25

Face view

Weld neck flange, ASME B16.5 Class 2500 RF

NPS 1-1/2 (DN 40)

Dimensions per ASME B16.5-2025, inches and millimetres as the standard's own tables give them.
tf and Y are the ASME B16.5 dimension, measured without the 0.25 in (6.4 mm) raised face; the tf + f and Y + f rows are the same flange measured over the face, which is what most catalogs print.
Bore B to suit the pipe schedule: see the table. Other walls to order.
Reference drawing. The purchase order and ASME B16.5 govern. Check the latest edition.
Generated at rajendradatacenter.us/flanges/high-pressure/

Dimension	in	mm
O Outside diameter	8.00	203
R Raised face diameter	2.88	73
f Raised face height	0.25	6.4
tf Thickness (min), without raised face	1.75	44.4
tf + f Thickness over the raised face	2.00	50.8
Y Length through hub, without raised face	4.38	111
Y + f Length through hub, over the raised face	4.63	117.4
X Hub diameter at base	3.12	79
A Hub diameter at weld end (pipe OD)	1.90	48.3
W Bolt circle diameter	5.75	146
h Bolt holes, 4 off	1.25	31.8

4 stud bolts of 1-1/8 in; holes 1.25 in (31.8 mm)

RAJENDRA INDUSTRIAL CORPORATION
rajendradatacenter.us
Drawing RIC-B165-WN2500-1.5
Scale 1:3 on Letter
Units: inches (mm)
Date 2026-11-22
Quote: rajendradatacenter.us/rfq/
sales@rajendradatacenter.com
+91 74338 71355