Bore B and approx. weight by pipe schedule

Schedule	B, in (mm)	CS lb (kg)	SS lb (kg)
Sch 5S / Sch 5	23.564 (598.5)	2720 (1234)	2772 (1257)
Sch 10S / Sch 10	23.500 (596.9)	2731 (1239)	2783 (1262)
Sch 20 / Sch 40S / STD	23.250 (590.6)	2773 (1258)	2826 (1282)
Sch 80S / XS	23.000 (584.2)	2815 (1277)	2868 (1301)
Sch 30	22.876 (581.1)	2835 (1286)	2889 (1311)
Sch 40	22.624 (574.6)	2877 (1305)	2932 (1330)
Sch 60	22.062 (560.4)	2968 (1346)	3024 (1372)
Sch 80	21.562 (547.7)	3047 (1382)	3105 (1408)
Sch 100	20.938 (531.8)	3143 (1425)	3203 (1453)
Sch 120	20.376 (517.6)	3227 (1464)	3288 (1492)
Sch 140	19.876 (504.9)	3300 (1497)	3363 (1525)
Sch 160	19.312 (490.5)	3380 (1533)	3444 (1562)

B = A - 2 x pipe wall (ASME B36.10M and B36.19M).
CS carbon steel, 7.85 g/cm3. SS stainless steel 316L, 8.0 g/cm3; 304L (7.9 g/cm3) weighs about 1% less.
Calculated from the dimensions as the standard gives them, with no allowance for tolerance.

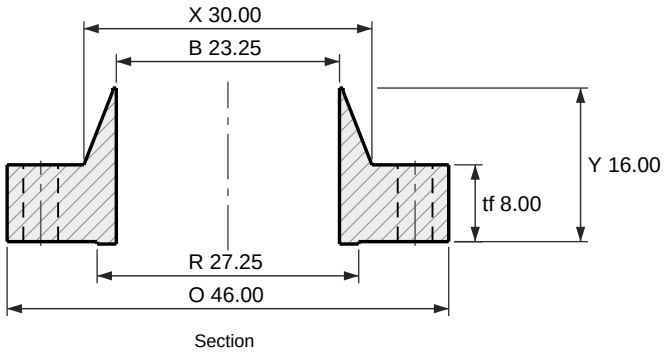

Section

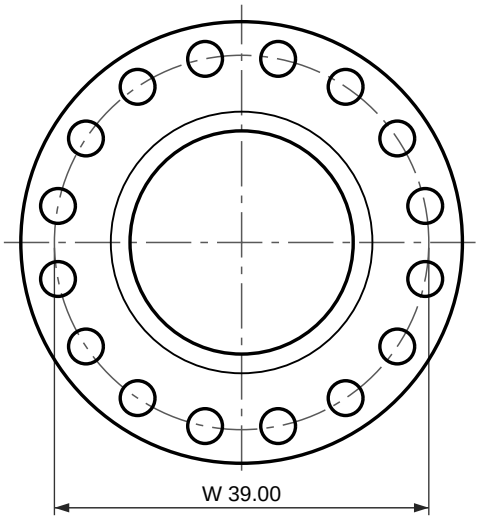

16 holes Ø3.62
Face view

Weld neck flange, ASME B16.5 Class 1500 RF

NPS 24 (DN 600)

Dimensions per ASME B16.5-2025, inches and millimetres as the standard's own tables give them.
tf and Y are the ASME B16.5 dimension, measured without the 0.25 in (6.4 mm) raised face; the tf + f and Y + f rows are the same flange measured over the face, which is what most catalogs print.
Bore B to suit the pipe schedule: see the table. Other walls to order.
Reference drawing. The purchase order and ASME B16.5 govern. Check the latest edition.
Generated at rajendradatacenter.us/flanges/high-pressure/

Dimension	in	mm
O Outside diameter	46.00	1168
R Raised face diameter	27.25	692.2
f Raised face height	0.25	6.4
tf Thickness (min), without raised face	8.00	203.2
tf + f Thickness over the raised face	8.25	209.6
Y Length through hub, without raised face	16.00	406
Y + f Length through hub, over the raised face	16.25	412.4
X Hub diameter at base	30.00	762
A Hub diameter at weld end (pipe OD)	24.00	609.6
W Bolt circle diameter	39.00	990.6
h Bolt holes, 16 off	3.62	92.1

16 stud bolts of 3-1/2 in; holes 3.62 in (92.1 mm)

RAJENDRA INDUSTRIAL CORPORATION
rajendradatacenter.us
Drawing RIC-B165-WN1500-24
Scale 1:20 on Letter
Units: inches (mm)
Date 2026-11-22
Quote: rajendradatacenter.us/rfq/
sales@rajendradatacenter.com
+91 74338 71355