Bore B and approx. weight by pipe schedule

Schedule	B, in (mm)	CS lb (kg)	SS lb (kg)
Sch 5S / Sch 5	2.245 (57.0)	23.0 (10.4)	23.5 (10.6)
Sch 10S / Sch 10	2.157 (54.8)	23.4 (10.6)	23.9 (10.8)
Sch 30	2.125 (54.0)	23.5 (10.7)	24.0 (10.9)
Sch 40S / STD / Sch 40	2.067 (52.5)	23.8 (10.8)	24.2 (11.0)
Sch 80S / XS / Sch 80	1.939 (49.3)	24.2 (11.0)	24.7 (11.2)
Sch 160	1.687 (42.8)	25.1 (11.4)	25.6 (11.6)
XXS	1.503 (38.2)	25.7 (11.6)	26.2 (11.9)

B = A - 2 x pipe wall (ASME B36.10M and B36.19M).
CS carbon steel, 7.85 g/cm3. SS stainless steel 316L, 8.0 g/cm3; 304L (7.9 g/cm3) weighs about 1% less.
Calculated from the dimensions as the standard gives them, with no allowance for tolerance.

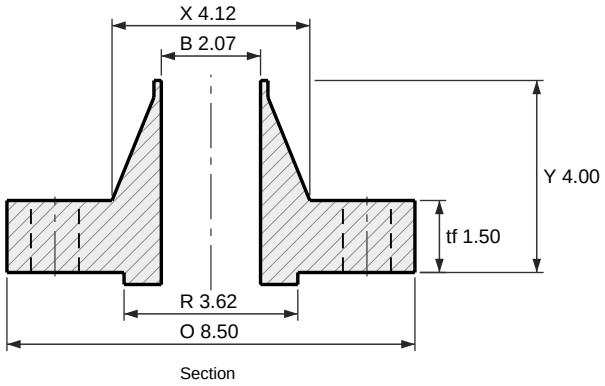

Section

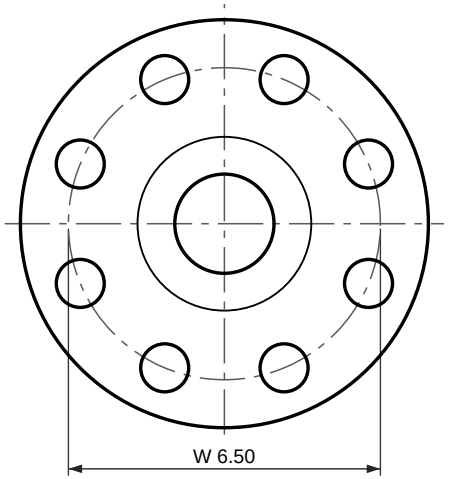

8 holes Ø1.00
Face view

Weld neck flange, ASME B16.5 Class 1500 RF

NPS 2 (DN 50)

Dimensions per ASME B16.5-2025, inches and millimetres as the standard's own tables give them.
tf and Y are the ASME B16.5 dimension, measured without the 0.25 in (6.4 mm) raised face; the tf + f and Y + f rows are the same flange measured over the face, which is what most catalogs print.
Bore B to suit the pipe schedule: see the table. Other walls to order.
ASME B16.5 gives Class 1500 the same dimensions as Class 900 in NPS 2; only the marking differs.
Reference drawing. The purchase order and ASME B16.5 govern. Check the latest edition.
Generated at rajendradatacenter.us/flanges/high-pressure/

Dimension	in	mm
O Outside diameter	8.50	216
R Raised face diameter	3.62	91.9
f Raised face height	0.25	6.4
tf Thickness (min), without raised face	1.50	38.1
tf + f Thickness over the raised face	1.75	44.5
Y Length through hub, without raised face	4.00	102
Y + f Length through hub, over the raised face	4.25	108.4
X Hub diameter at base	4.12	105
A Hub diameter at weld end (pipe OD)	2.38	60.5
W Bolt circle diameter	6.50	165.1
h Bolt holes, 8 off	1.00	25.4

8 stud bolts of 7/8 in; holes 1.00 in (25.4 mm)

RAJENDRA INDUSTRIAL CORPORATION
rajendradatacenter.us
Drawing RIC-B165-WN1500-2
Scale 1:4 on Letter
Units: inches (mm)
Date 2026-11-22
Quote: rajendradatacenter.us/rfq/
sales@rajendradatacenter.com
+91 74338 71355