Bore B and approx. weight by pipe schedule

Schedule	B, in (mm)	CS lb (kg)	SS lb (kg)
Sch 5S / Sch 5	1.530 (38.9)	9.1 (4.1)	9.2 (4.2)
Sch 10S / Sch 10	1.442 (36.6)	9.2 (4.2)	9.4 (4.3)
Sch 30	1.426 (36.2)	9.3 (4.2)	9.5 (4.3)
Sch 40S / STD / Sch 40	1.380 (35.1)	9.4 (4.3)	9.6 (4.3)
Sch 80S / XS / Sch 80	1.278 (32.5)	9.6 (4.3)	9.7 (4.4)
Sch 160	1.160 (29.5)	9.8 (4.4)	9.9 (4.5)
XXS	0.896 (22.8)	10.1 (4.6)	10.3 (4.7)

B = A - 2 x pipe wall (ASME B36.10M and B36.19M).
CS carbon steel, 7.85 g/cm3. SS stainless steel 316L, 8.0 g/cm3; 304L (7.9 g/cm3) weighs about 1% less.
Calculated from the dimensions as the standard gives them, with no allowance for tolerance.

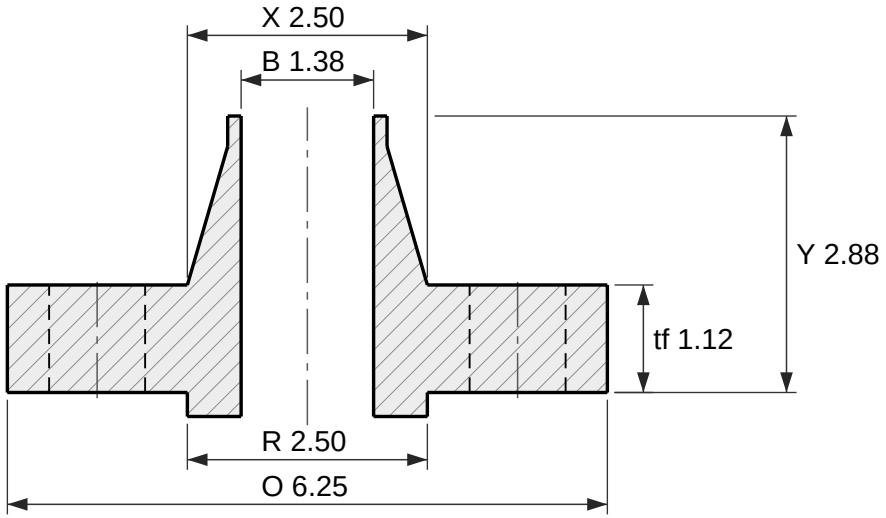

Section

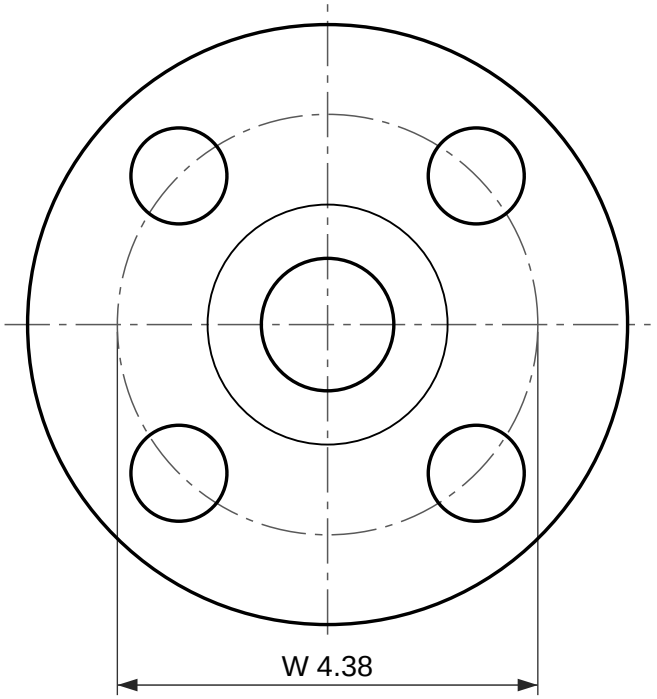

4 holes Ø1.00

Face view

Weld neck flange, ASME B16.5 Class 1500 RF

NPS 1-1/4 (DN 32)

Dimensions per ASME B16.5-2025, inches and millimetres as the standard's own tables give them.
tf and Y are the ASME B16.5 dimension, measured without the 0.25 in (6.4 mm) raised face; the tf + f and Y + f rows are the same flange measured over the face, which is what most catalogs print.
Bore B to suit the pipe schedule: see the table. Other walls to order.
ASME B16.5 gives Class 1500 the same dimensions as Class 900 in NPS 1-1/4; only the marking differs.
Reference drawing. The purchase order and ASME B16.5 govern. Check the latest edition.
Generated at rajendradatacenter.us/flanges/high-pressure/

Dimension	in	mm
O Outside diameter	6.25	159
R Raised face diameter	2.50	63.5
f Raised face height	0.25	6.4
tf Thickness (min), without raised face	1.12	28.4
tf + f Thickness over the raised face	1.37	34.8
Y Length through hub, without raised face	2.88	73
Y + f Length through hub, over the raised face	3.13	79.4
X Hub diameter at base	2.50	64
A Hub diameter at weld end (pipe OD)	1.66	42.2
W Bolt circle diameter	4.38	111.1
h Bolt holes, 4 off	1.00	25.4

4 stud bolts of 7/8 in; holes 1.00 in (25.4 mm)

RAJENDRA INDUSTRIAL CORPORATION
rajendradatacenter.us
Drawing RIC-B165-WN1500-1.25
Scale 1:2 on Letter
Units: inches (mm)
Date 2026-11-22
Quote: rajendradatacenter.us/rfq/
sales@rajendradatacenter.com
+91 74338 71355