Approx. weight

Material	lb	kg
Carbon steel	2.6	1.2
Stainless steel 304 and 304L	2.6	1.2
Stainless steel 316 and 316L	2.7	1.2

Densities 7.85, 7.9 and 8.0 g/cm3.
Calculated from the dimensions as the standard gives them, with no allowance for tolerance.

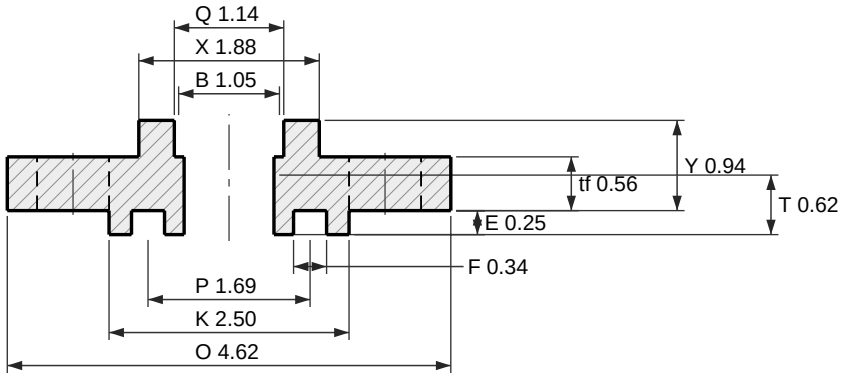

Section

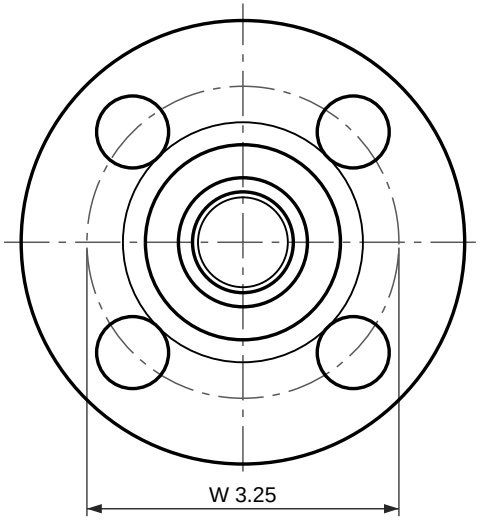

4 holes Ø0.75
Face view

Threaded flange, ASME B16.5 Class 300 RJ

NPS 3/4 (DN 20)

Dimensions per ASME B16.5-2025, inches and millimetres as the standard's own tables give them.
Thread: NPT 3/4 taper pipe thread to ASME B1.20.1, 14 threads per inch, counterbored at the back (clause 6.9.3). The thread profile is drawn for illustration.
Ring joint facing to ASME B16.5 Table 5, ring and groove number R13. The raised portion stands E above the flange, the same as the depth of the groove, so the bottom of the groove is level with the flange face. Ring joint gasket dimensions are to ASME B16.20 (clause 6.11.1).
tf and Y are the ASME B16.5 dimension, measured without the raised portion; the tf + E and Y + E rows are the same flange measured over the facing.
Reference drawing. The purchase order and ASME B16.5 govern. Check the latest edition.
Generated at rajendradatacenter.us/flanges/ring-type-joint/

Dimension	in	mm
O Outside diameter	4.62	117
K Diameter of the raised portion	2.50	63.5
E Depth of the groove, and the raised portion	0.25	6.35
P Pitch diameter of the groove	1.69	42.88
F Width of the groove	0.34	8.74
r Radius at the bottom of the groove	0.03	0.8
tf Thickness (min), without the raised portion	0.56	14.2
tf + E Thickness over the raised portion	0.81	20.5
Y Length through hub, without the raised portion	0.94	24
Y + E Length through hub, over the raised portion	1.19	30.4
X Hub diameter at base	1.88	48
B Bore	1.05	26.7
T Thread length, from the raised face	0.62	16
Q Counterbore at the back	1.14	29
W Bolt circle diameter	3.25	82.6
h Bolt holes, 4 off	0.75	19.1

4 stud bolts of 5/8 in; holes 0.75 in (19.1 mm)

RAJENDRA INDUSTRIAL CORPORATION
rajendradatacenter.us
Drawing RIC-B165-TH300RJ-0.75
Scale 1:2 on Letter
Units: inches (mm)
Date 2026-11-22
Quote: rajendradatacenter.us/rfq/
sales@rajendradatacenter.com
+91 74338 71355