Approx. weight

Material	lb	kg
Carbon steel	22.4	10.2
Stainless steel 304 and 304L	22.5	10.2
Stainless steel 316 and 316L	22.8	10.4

Densities 7.85, 7.9 and 8.0 g/cm3.
Calculated from the dimensions as the standard gives them, with no allowance for tolerance.

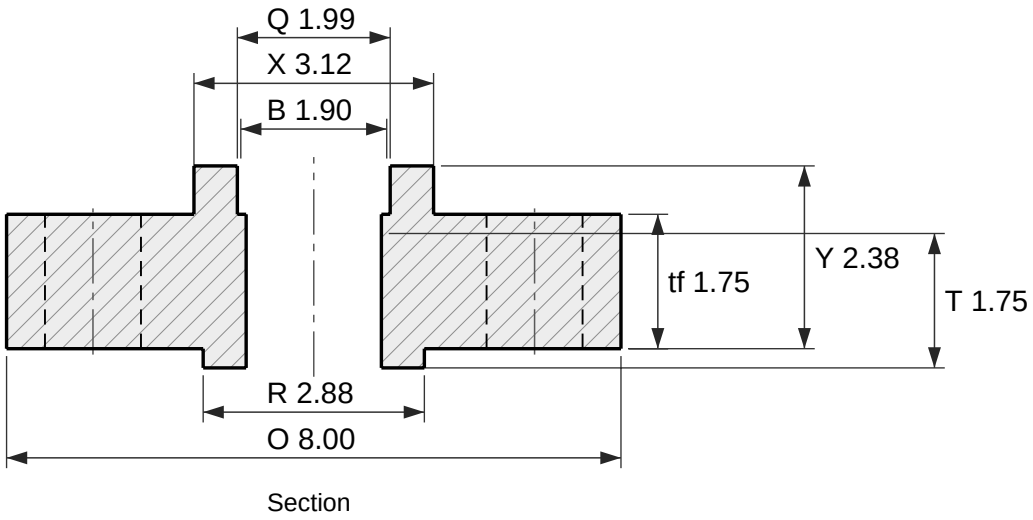

Section

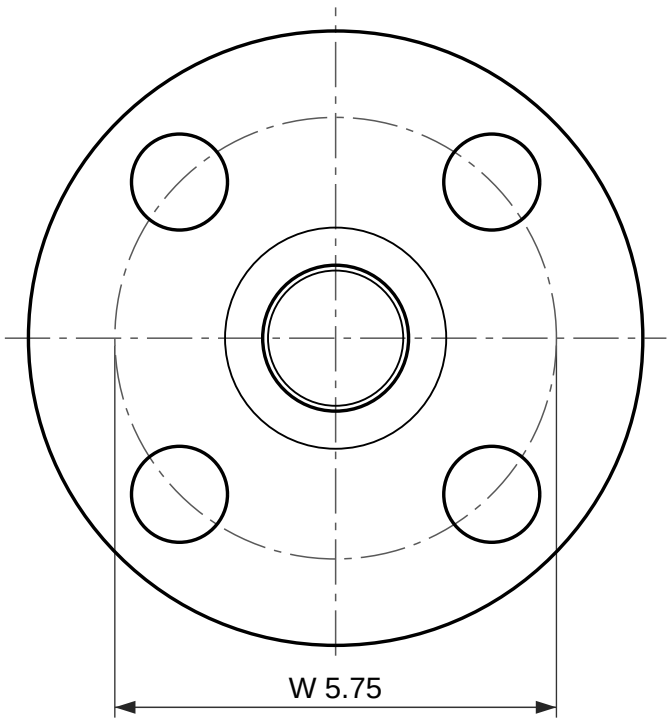

4 holes Ø1.25

Face view

Threaded flange, ASME B16.5 Class 2500 RF

NPS 1-1/2 (DN 40)

Dimensions per ASME B16.5-2025, inches and millimetres as the standard's own tables give them.
Thread: NPT 1-1/2 taper pipe thread to ASME B1.20.1, 11.5 threads per inch, counterbored at the back (clause 6.9.3). The thread profile is drawn for illustration.
tf and Y are the ASME B16.5 dimension, measured without the 0.25 in (6.4 mm) raised face; the tf + f and Y + f rows are the same flange measured over the face, which is what most catalogs print.
Reference drawing. The purchase order and ASME B16.5 govern. Check the latest edition.
Generated at rajendradatacenter.us/flanges/high-pressure/

Dimension	in	mm
O Outside diameter	8.00	203
R Raised face diameter	2.88	73
f Raised face height	0.25	6.4
tf Thickness (min), without raised face	1.75	44.4
tf + f Thickness over the raised face	2.00	50.8
Y Length through hub, without raised face	2.38	60
Y + f Length through hub, over the raised face	2.63	66.4
X Hub diameter at base	3.12	79
B Bore	1.90	48.3
T Thread length, from the raised face	1.75	44
Q Counterbore at the back	1.99	50.5
W Bolt circle diameter	5.75	146
h Bolt holes, 4 off	1.25	31.8

4 stud bolts of 1-1/8 in; holes 1.25 in (31.8 mm)

RAJENDRA INDUSTRIAL CORPORATION

rajendradatacenter.us
Drawing RIC-B165-TH2500-1.5
Scale 1:2.5 on Letter
Units: inches (mm)
Date 2026-11-22
Quote: rajendradatacenter.us/rfq/
sales@rajendradatacenter.com
+91 74338 71355