Approx. weight

Material	lb	kg
Carbon steel	6.8	3.1
Stainless steel 304 and 304L	6.8	3.1
Stainless steel 316 and 316L	6.9	3.1

Densities 7.85, 7.9 and 8.0 g/cm3.
Calculated from the dimensions as the standard gives them, with no allowance for tolerance.

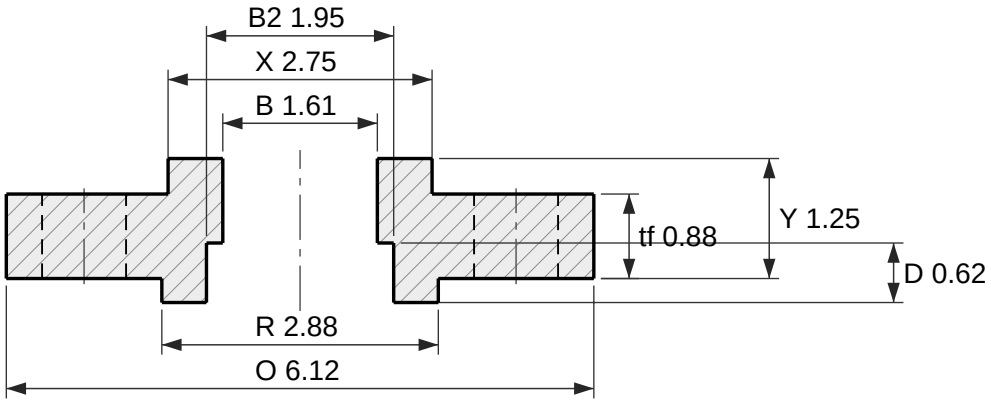

Section

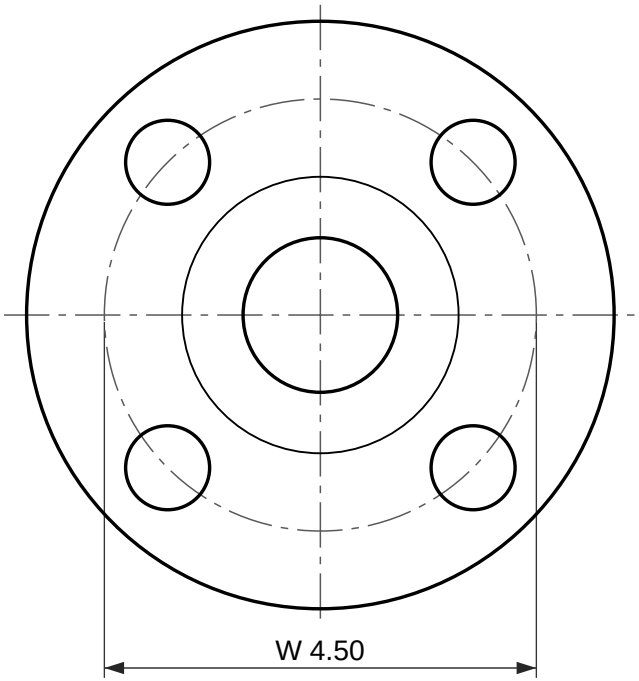

4 holes Ø0.88

Face view

Socket welding flange, ASME B16.5 Class 600 RF

NPS 1-1/2 (DN 40)

Dimensions per ASME B16.5-2025, inches and millimetres as the standard's own tables give them.
The socket takes the pipe end; leave the weld gap your procedure calls for at the bottom of the socket.
tf and Y are the ASME B16.5 dimension, measured without the 0.25 in (6.4 mm) raised face; the tf + f and Y + f rows are the same flange measured over the face, which is what most catalogs print.
Reference drawing. The purchase order and ASME B16.5 govern. Check the latest edition.
Generated at rajendradatacenter.us/flanges/high-pressure/

Dimension	in	mm
O Outside diameter	6.12	155
R Raised face diameter	2.88	73
f Raised face height	0.25	6.4
tf Thickness (min), without raised face	0.88	22.4
tf + f Thickness over the raised face	1.13	28.8
Y Length through hub, without raised face	1.25	32
Y + f Length through hub, over the raised face	1.50	38.4
X Hub diameter at base	2.75	70
B Bore	1.61	40.9
B2 Socket bore	1.95	49.5
D Depth of socket	0.62	16
W Bolt circle diameter	4.50	114.3
h Bolt holes, 4 off	0.88	22.2

4 stud bolts of 3/4 in; holes 0.88 in (22.2 mm)

RAJENDRA INDUSTRIAL CORPORATION

rajendradatacenter.us
Drawing RIC-B165-SW600-1.5
Scale 1:2 on Letter
Units: inches (mm)
Date 2026-11-22
Quote: rajendradatacenter.us/rfq/
sales@rajendradatacenter.com
+91 74338 71355