Approx. weight

Material	lb	kg
Carbon steel	156	70.7
Stainless steel 304 and 304L	157	71.2
Stainless steel 316 and 316L	159	72.1

Densities 7.85, 7.9 and 8.0 g/cm3.
Calculated from the dimensions as the standard gives them, with no allowance for tolerance.

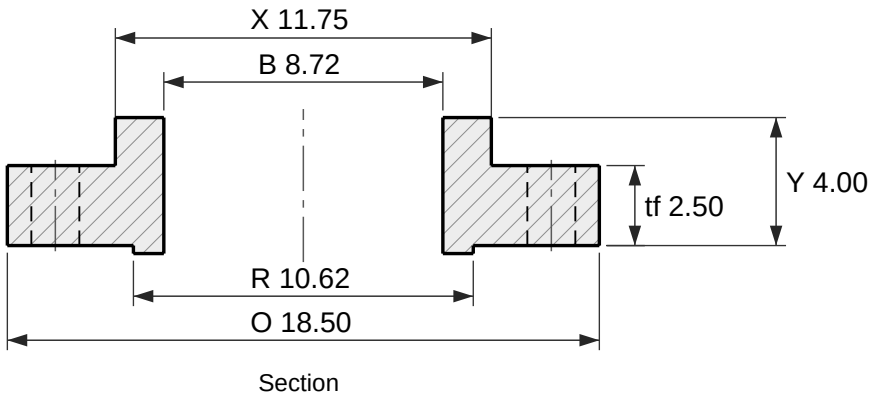

Section

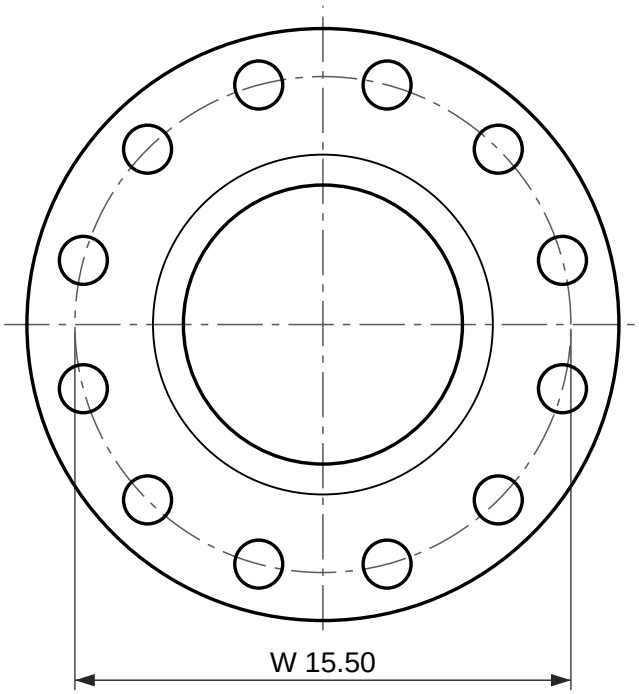

12 holes Ø1.50
Face view

Slip-on flange with hub, ASME B16.5 Class 900 RF

NPS 8 (DN 200)

Dimensions per ASME B16.5-2025, inches and millimetres as the standard's own tables give them.
tf and Y are the ASME B16.5 dimension, measured without the 0.25 in (6.4 mm) raised face; the tf + f and Y + f rows are the same flange measured over the face, which is what most catalogs print.
Reference drawing. The purchase order and ASME B16.5 govern. Check the latest edition.
Generated at rajendradatacenter.us/flanges/high-pressure/

Dimension	in	mm
O Outside diameter	18.50	470
R Raised face diameter	10.62	269.7
f Raised face height	0.25	6.4
tf Thickness (min), without raised face	2.50	63.5
tf + f Thickness over the raised face	2.75	69.9
Y Length through hub, without raised face	4.00	102
Y + f Length through hub, over the raised face	4.25	108.4
X Hub diameter at base	11.75	298
B Bore	8.72	221.5
W Bolt circle diameter	15.50	393.7
h Bolt holes, 12 off	1.50	38.1

12 stud bolts of 1-3/8 in; holes 1.50 in (38.1 mm)

RAJENDRA INDUSTRIAL CORPORATION
rajendradatacenter.us
Drawing RIC-B165-SO900-8
Scale 1:6 on Letter
Units: inches (mm)
Date 2026-11-22
Quote: rajendradatacenter.us/rfq/
sales@rajendradatacenter.com
+91 74338 71355