Approx. weight

Material	lb	kg
Carbon steel	5.1	2.3
Stainless steel 304 and 304L	5.2	2.3
Stainless steel 316 and 316L	5.2	2.4

Densities 7.85, 7.9 and 8.0 g/cm3.
Calculated from the dimensions as the standard gives them, with no allowance for tolerance.

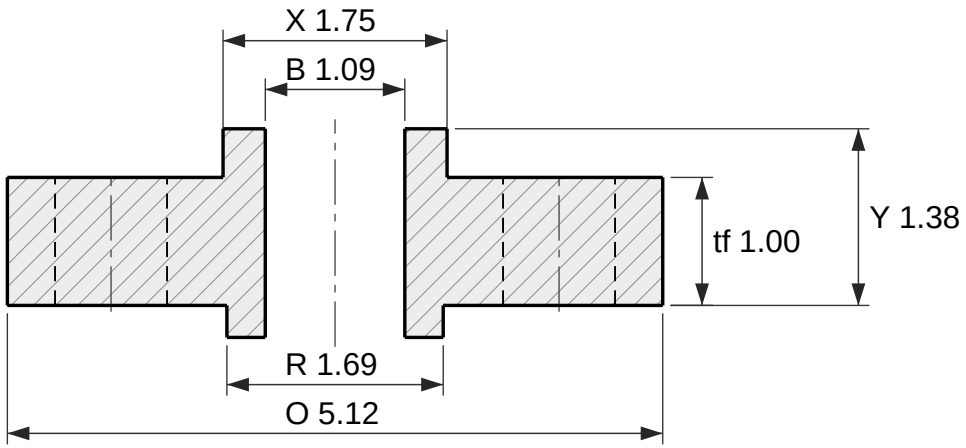

Section

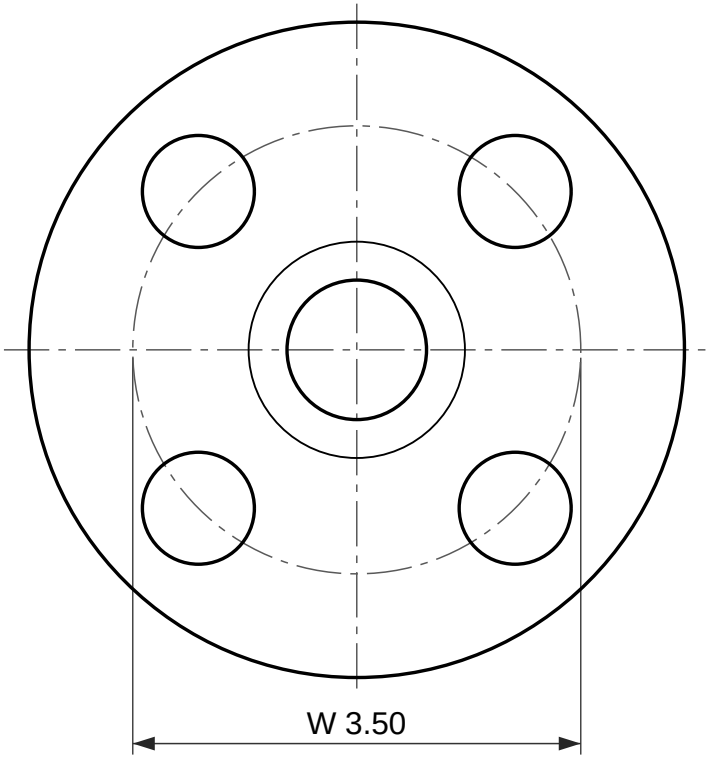

4 holes Ø0.88

Face view

Slip-on flange with hub, ASME B16.5 Class 900 RF

NPS 3/4 (DN 20)

Dimensions per ASME B16.5-2025, inches and millimetres as the standard's own tables give them. Note 5 of the Class 900 table: use the Class 1500 dimensions in this size.
tf and Y are the ASME B16.5 dimension, measured without the 0.25 in (6.4 mm) raised face; the tf + f and Y + f rows are the same flange measured over the face, which is what most catalogs print.
ASME B16.5 gives Class 900 the same dimensions as Class 1500 in NPS 3/4; only the marking differs.
Reference drawing. The purchase order and ASME B16.5 govern. Check the latest edition.
Generated at rajendradatacenter.us/flanges/high-pressure/

Dimension	in	mm
O Outside diameter	5.12	130
R Raised face diameter	1.69	42.9
f Raised face height	0.25	6.4
tf Thickness (min), without raised face	1.00	25.4
tf + f Thickness over the raised face	1.25	31.8
Y Length through hub, without raised face	1.38	35
Y + f Length through hub, over the raised face	1.63	41.4
X Hub diameter at base	1.75	44
B Bore	1.09	27.7
W Bolt circle diameter	3.50	88.9
h Bolt holes, 4 off	0.88	22.2

4 stud bolts of 3/4 in; holes 0.88 in (22.2 mm)

RAJENDRA INDUSTRIAL CORPORATION
rajendradatacenter.us
Drawing RIC-B165-SO900-0.75
Scale 1:1.5 on Letter
Units: inches (mm)
Date 2026-11-22
Quote: rajendradatacenter.us/rfq/
sales@rajendradatacenter.com
+91 74338 71355