Approx. weight

Material	lb	kg
Carbon steel	699	317
Stainless steel 304 and 304L	703	319
Stainless steel 316 and 316L	712	323

Densities 7.85, 7.9 and 8.0 g/cm3.
Calculated from the dimensions as the standard gives them, with no allowance for tolerance.

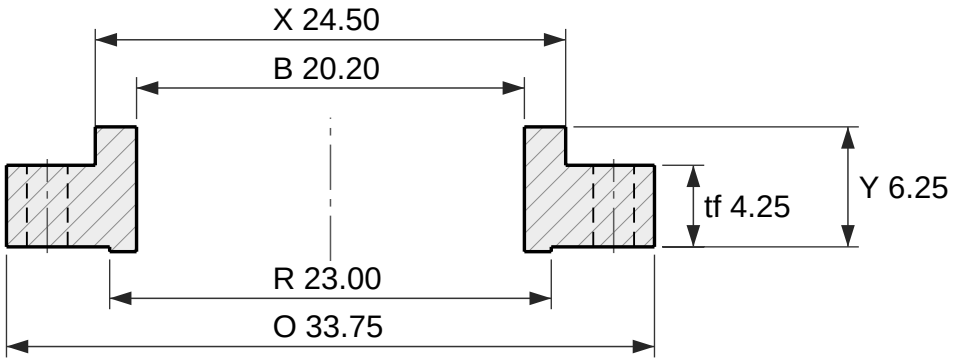

Section

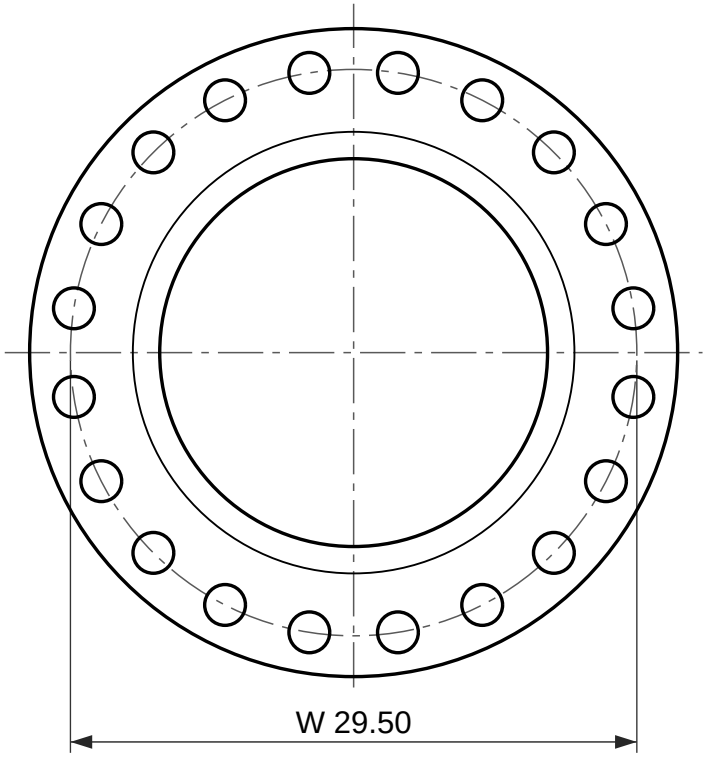

20 holes Ø2.12

Face view

Slip-on flange with hub, ASME B16.5 Class 900 RF

NPS 20 (DN 500)

Dimensions per ASME B16.5-2025, inches and millimetres as the standard's own tables give them.
tf and Y are the ASME B16.5 dimension, measured without the 0.25 in (6.4 mm) raised face; the tf + f and Y + f rows are the same flange measured over the face, which is what most catalogs print.
Reference drawing. The purchase order and ASME B16.5 govern. Check the latest edition.
Generated at rajendradatacenter.us/flanges/high-pressure/

Dimension	in	mm
O Outside diameter	33.75	857
R Raised face diameter	23.00	584.2
f Raised face height	0.25	6.4
tf Thickness (min), without raised face	4.25	108
tf + f Thickness over the raised face	4.50	114.4
Y Length through hub, without raised face	6.25	159
Y + f Length through hub, over the raised face	6.50	165.4
X Hub diameter at base	24.50	622
B Bore	20.20	513.1
W Bolt circle diameter	29.50	749.3
h Bolt holes, 20 off	2.12	54.0

20 stud bolts of 2 in; holes 2.12 in (54.0 mm)

RAJENDRA INDUSTRIAL CORPORATION

rajendradatacenter.us
Drawing RIC-B165-SO900-20
Scale 1:10 on Letter
Units: inches (mm)
Date 2026-11-22
Quote: rajendradatacenter.us/rfq/
sales@rajendradatacenter.com
+91 74338 71355