Approx. weight

Material	lb	kg
Carbon steel	7.6	3.4
Stainless steel 304 and 304L	7.6	3.4
Stainless steel 316 and 316L	7.7	3.5

Densities 7.85, 7.9 and 8.0 g/cm3.
Calculated from the dimensions as the standard gives them, with no allowance for tolerance.

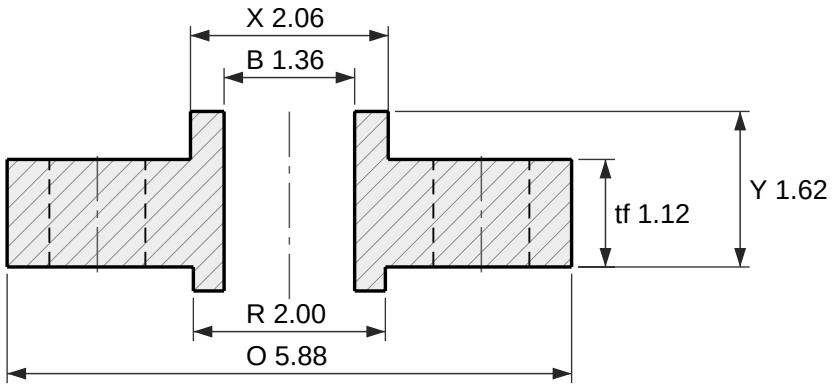

Section

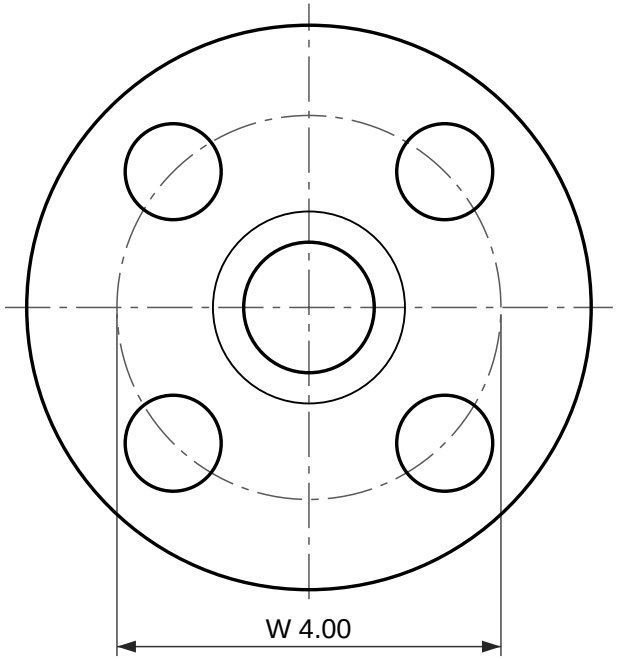

4 holes Ø1.00
Face view

Slip-on flange with hub, ASME B16.5 Class 900 RF

NPS 1 (DN 25)

Dimensions per ASME B16.5-2025, inches and millimetres as the standard's own tables give them. Note 5 of the Class 900 table: use the Class 1500 dimensions in this size.
tf and Y are the ASME B16.5 dimension, measured without the 0.25 in (6.4 mm) raised face; the tf + f and Y + f rows are the same flange measured over the face, which is what most catalogs print.
ASME B16.5 gives Class 900 the same dimensions as Class 1500 in NPS 1; only the marking differs.
Reference drawing. The purchase order and ASME B16.5 govern. Check the latest edition.
Generated at rajendradatacenter.us/flanges/high-pressure/

Dimension	in	mm
O Outside diameter	5.88	149
R Raised face diameter	2.00	50.8
f Raised face height	0.25	6.4
tf Thickness (min), without raised face	1.12	28.4
tf + f Thickness over the raised face	1.37	34.8
Y Length through hub, without raised face	1.62	41
Y + f Length through hub, over the raised face	1.87	47.4
X Hub diameter at base	2.06	52
B Bore	1.36	34.5
W Bolt circle diameter	4.00	101.6
h Bolt holes, 4 off	1.00	25.4

4 stud bolts of 7/8 in; holes 1.00 in (25.4 mm)

RAJENDRA INDUSTRIAL CORPORATION
rajendradatacenter.us
Drawing RIC-B165-SO900-1
Scale 1:2 on Letter
Units: inches (mm)
Date 2026-11-22
Quote: rajendradatacenter.us/rfq/
sales@rajendradatacenter.com
+91 74338 71355