**Approx. weight**

| Material | lb | kg |
|---|---|---|
| Carbon steel | 3.9 | 1.7 |
| Stainless steel 304 and 304L | 3.9 | 1.8 |
| Stainless steel 316 and 316L | 3.9 | 1.8 |

Densities 7.85, 7.9 and 8.0 g/cm3.
Calculated from the dimensions as the standard gives them, with no allowance for tolerance.

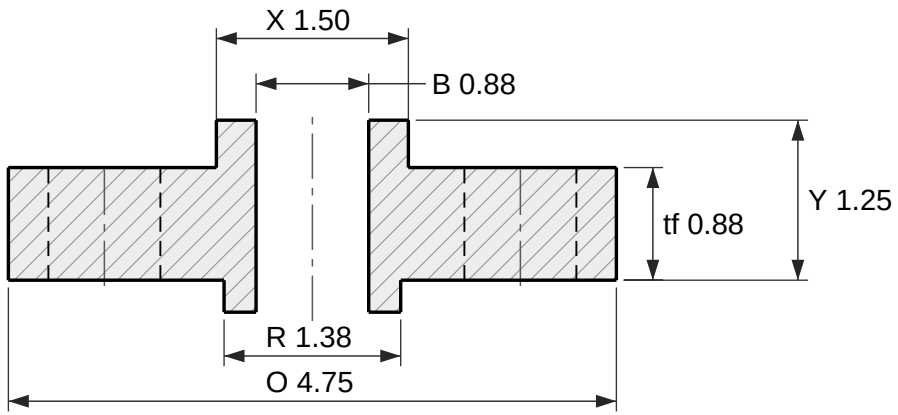


Section

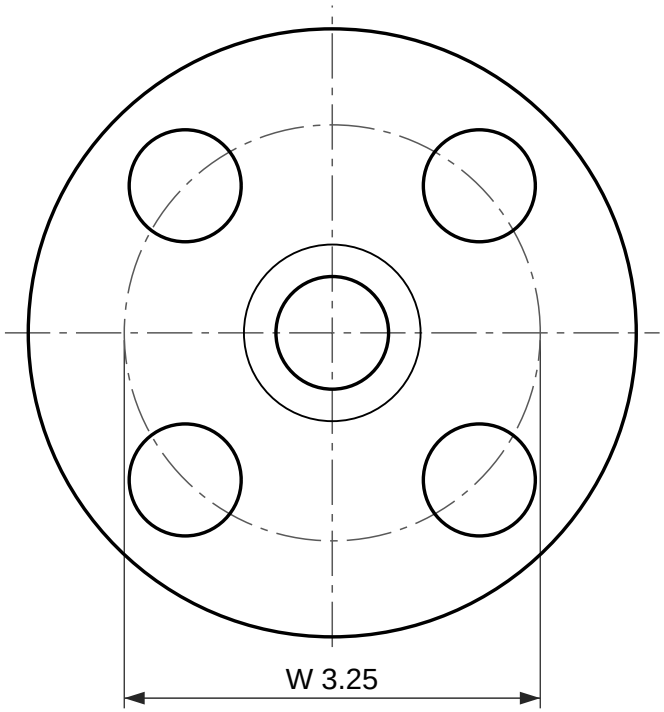


4 holes Ø0.88

Face view

# Slip-on flange with hub, ASME B16.5 Class 900 RF

NPS 1/2 (DN 15)

Dimensions per ASME B16.5-2025, inches and millimetres as the standard's own tables give them. Note 5 of the Class 900 table: use the Class 1500 dimensions in this size.
tf and Y are the ASME B16.5 dimension, measured without the 0.25 in (6.4 mm) raised face; the tf + f and Y + f rows are the same flange measured over the face, which is what most catalogs print.
ASME B16.5 gives Class 900 the same dimensions as Class 1500 in NPS 1/2; only the marking differs.
Reference drawing. The purchase order and ASME B16.5 govern. Check the latest edition.
Generated at rajendradatacenter.us/flanges/high-pressure/

| Dimension | in | mm |
|---|---|---|
| O Outside diameter | 4.75 | 121 |
| R Raised face diameter | 1.38 | 35.1 |
| f Raised face height | 0.25 | 6.4 |
| tf Thickness (min), without raised face | 0.88 | 22.4 |
| tf + f Thickness over the raised face | 1.13 | 28.8 |
| Y Length through hub, without raised face | 1.25 | 32 |
| Y + f Length through hub, over the raised face | 1.50 | 38.4 |
| X Hub diameter at base | 1.50 | 38 |
| B Bore | 0.88 | 22.4 |
| W Bolt circle diameter | 3.25 | 82.6 |
| h Bolt holes, 4 off | 0.88 | 22.2 |

4 stud bolts of 3/4 in; holes 0.88 in (22.2 mm)

RAJENDRA INDUSTRIAL CORPORATION
rajendradatacenter.us
Drawing RIC-B165-SO900-0.5
Scale 1:1.5 on Letter
Units: inches (mm)
Date 2026-11-22
Quote: rajendradatacenter.us/rfq/
sales@rajendradatacenter.com
+91 74338 71355