Approx. weight

Material	lb	kg
Carbon steel	1.6	0.7
Stainless steel 304 and 304L	1.6	0.7
Stainless steel 316 and 316L	1.7	0.8

Densities 7.85, 7.9 and 8.0 g/cm3.
Calculated from the dimensions as the standard gives them, with no allowance for tolerance.

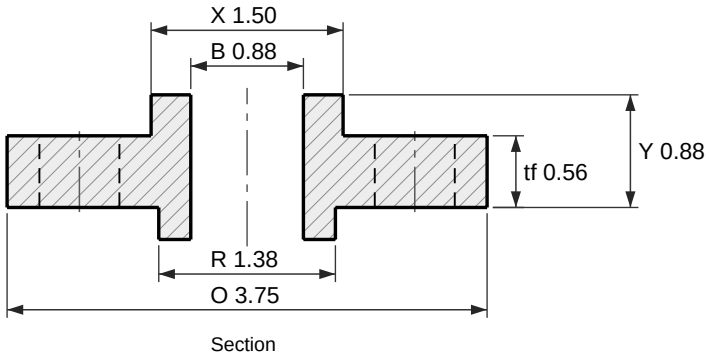

Section

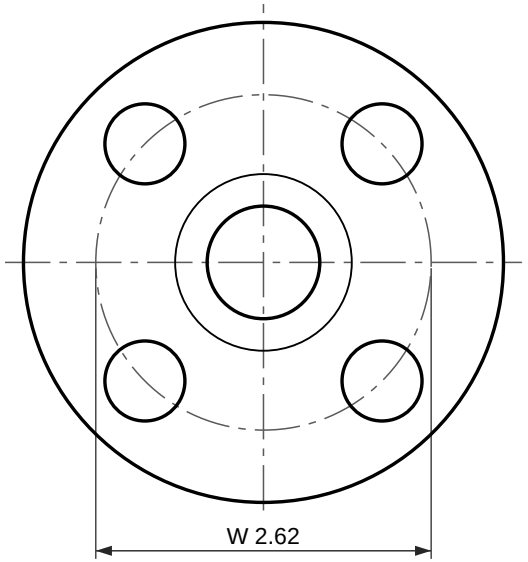

4 holes Ø0.62
Face view

Slip-on flange with hub, ASME B16.5 Class 400 RF

NPS 1/2 (DN 15)

Dimensions per ASME B16.5-2025, inches and millimetres as the standard's own tables give them. Note 5 of the Class 400 table: use the Class 600 dimensions in this size.
tf and Y are the ASME B16.5 dimension, measured without the 0.25 in (6.4 mm) raised face; the tf + f and Y + f rows are the same flange measured over the face, which is what most catalogs print.
ASME B16.5 gives Class 400 the same dimensions as Class 600 in NPS 1/2; only the marking differs.
Reference drawing. The purchase order and ASME B16.5 govern. Check the latest edition.
Generated at rajendradatacenter.us/flanges/high-pressure/

Dimension	in	mm
O Outside diameter	3.75	95
R Raised face diameter	1.38	35.1
f Raised face height	0.25	6.4
tf Thickness (min), without raised face	0.56	14.2
tf + f Thickness over the raised face	0.81	20.6
Y Length through hub, without raised face	0.88	22
Y + f Length through hub, over the raised face	1.13	28.4
X Hub diameter at base	1.50	38
B Bore	0.88	22.4
W Bolt circle diameter	2.62	66.5
h Bolt holes, 4 off	0.62	15.9

4 stud bolts of 1/2 in; holes 0.62 in (15.9 mm)

RAJENDRA INDUSTRIAL CORPORATION
rajendradatacenter.us
Drawing RIC-B165-SO400-0.5
Scale 1:1.5 on Letter
Units: inches (mm)
Date 2026-11-22
Quote: rajendradatacenter.us/rfq/
sales@rajendradatacenter.com
+91 74338 71355