Approx. weight

Material	lb	kg
Carbon steel	4.4	2.0
Stainless steel 304 and 304L	4.4	2.0
Stainless steel 316 and 316L	4.5	2.0

Densities 7.85, 7.9 and 8.0 g/cm3.
Calculated from the dimensions as the standard gives them, with no allowance for tolerance.

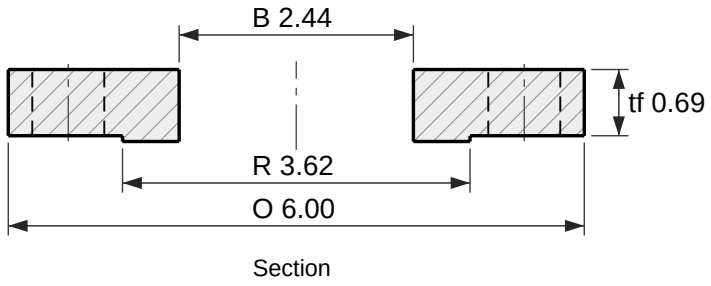

Section

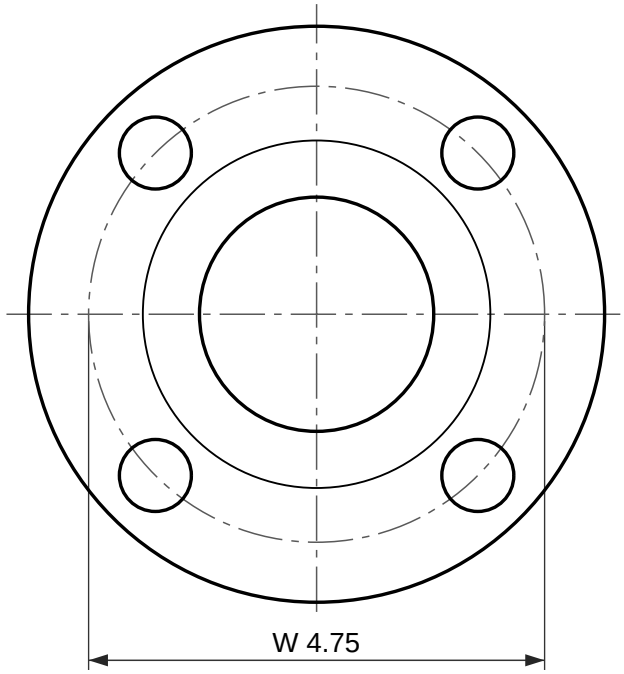

4 holes Ø0.75
Face view

Slip-on flange, Class 150 RF, ASME B16.5 drilling

NPS 2 (DN 50)

ASME B16.5 slip-on flanges have a hub. This flange keeps the B16.5 outside diameter, drilling, raised face and slip-on bore without it.
Thickness shown is the B16.5 minimum; confirm the thickness for a flange without a hub in the order.
tf is measured without the 0.06 in (1.5 mm) raised face; the tf + f row is the same flange measured over the face.
Reference drawing. The purchase order governs.
Generated at rajendradatacenter.us/flanges/slip-on/

Dimension	in	mm
O Outside diameter	6.00	152
R Raised face diameter	3.62	91.9
f Raised face height	0.06	1.5
tf Thickness (min), without raised face	0.69	17.5
tf + f Thickness over the raised face	0.75	19
B Bore	2.44	61.9
W Bolt circle diameter	4.75	120.6
h Bolt holes, 4 off	0.75	19.1

4 stud bolts of 5/8 in; holes 0.75 in (19.1 mm)

RAJENDRA INDUSTRIAL CORPORATION
rajendradatacenter.us
Drawing RIC-B165-PL150-2
Scale 1:2 on Letter
Units: inches (mm)
Date 2026-11-22
Quote: rajendradatacenter.us/rfq/
sales@rajendradatacenter.com
+91 74338 71355