Approx. weight

Material	lb	kg
Carbon steel	41.9	19.0
Stainless steel 304 and 304L	42.2	19.1
Stainless steel 316 and 316L	42.7	19.4

Densities 7.85, 7.9 and 8.0 g/cm3.
Calculated from the dimensions as the standard gives them, with no allowance for tolerance.

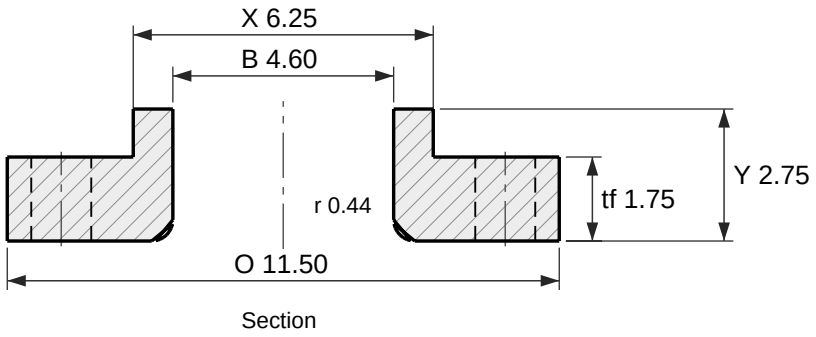

Section

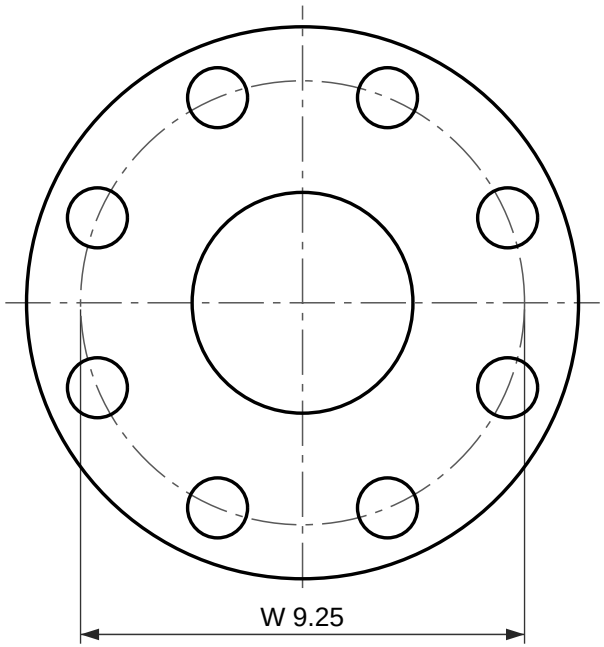

8 holes Ø1.25
Face view

Lap joint flange, ASME B16.5 Class 900

NPS 4 (DN 100)

Dimensions per ASME B16.5-2025, inches and millimetres as the standard's own tables give them.
Lap joint flange: no raised face; it seats on the stub end lap.
Reference drawing. The purchase order and ASME B16.5 govern. Check the latest edition.
Generated at rajendradatacenter.us/flanges/high-pressure/

Dimension	in	mm
O Outside diameter	11.50	292
tf Flange thickness	1.75	44.5
Y Length through hub	2.75	70
X Hub diameter at base	6.25	159
B Bore	4.60	116.8
r Corner radius of bore	0.44	11
W Bolt circle diameter	9.25	235
h Bolt holes, 8 off	1.25	31.8

8 stud bolts of 1-1/8 in; holes 1.25 in (31.8 mm)

RAJENDRA INDUSTRIAL CORPORATION
rajendradatacenter.us
Drawing RIC-B165-LJ900-4
Scale 1:4 on Letter
Units: inches (mm)
Date 2026-11-22
Quote: rajendradatacenter.us/rfq/
sales@rajendradatacenter.com
+91 74338 71355