**Approx. weight**

| Material | lb | kg |
|---|---|---|
| Carbon steel | 232 | 105 |
| Stainless steel 304 and 304L | 234 | 106 |
| Stainless steel 316 and 316L | 237 | 107 |

Densities 7.85, 7.9 and 8.0 g/cm3.
Calculated from the dimensions as the standard gives them, with no allowance for tolerance.

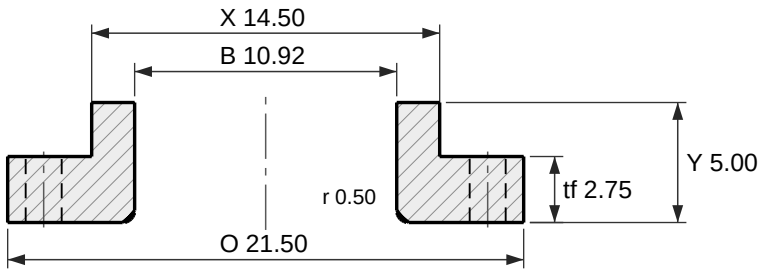

Section

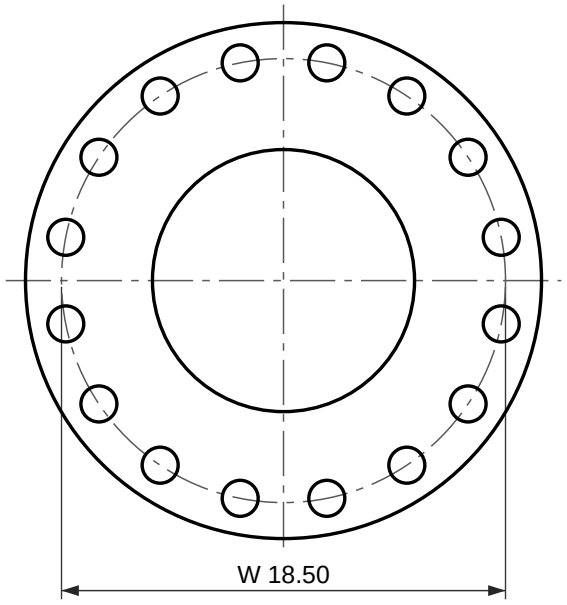

16 holes Ø1.50
Face view

# Lap joint flange, ASME B16.5 Class 900

NPS 10 (DN 250)

Dimensions per ASME B16.5-2025, inches and millimetres as the standard's own tables give them.
Lap joint flange: no raised face; it seats on the stub end lap.
Reference drawing. The purchase order and ASME B16.5 govern. Check the latest edition.
Generated at rajendradatacenter.us/flanges/high-pressure/

| Dimension | in | mm |
|---|---|---|
| O Outside diameter | 21.50 | 546 |
| tf Flange thickness | 2.75 | 69.9 |
| Y Length through hub | 5.00 | 127 |
| X Hub diameter at base | 14.50 | 368 |
| B Bore | 10.92 | 277.4 |
| r Corner radius of bore | 0.50 | 13 |
| W Bolt circle diameter | 18.50 | 469.9 |
| h Bolt holes, 16 off | 1.50 | 38.1 |

16 stud bolts of 1-3/8 in; holes 1.50 in (38.1 mm)

RAJENDRA INDUSTRIAL CORPORATION
rajendradatacenter.us
Drawing RIC-B165-LJ900-10
Scale 1:8 on Letter
Units: inches (mm)
Date 2026-11-22
Quote: rajendradatacenter.us/rfq/
sales@rajendradatacenter.com
+91 74338 71355