Approx. weight

Material	lb	kg
Carbon steel	59.7	27.1
Stainless steel 304 and 304L	60.1	27.3
Stainless steel 316 and 316L	60.9	27.6

Densities 7.85, 7.9 and 8.0 g/cm3.
Calculated from the dimensions as the standard gives them, with no allowance for tolerance.

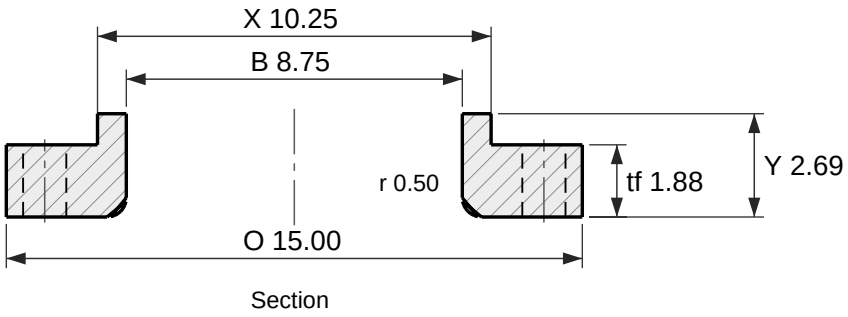

Section

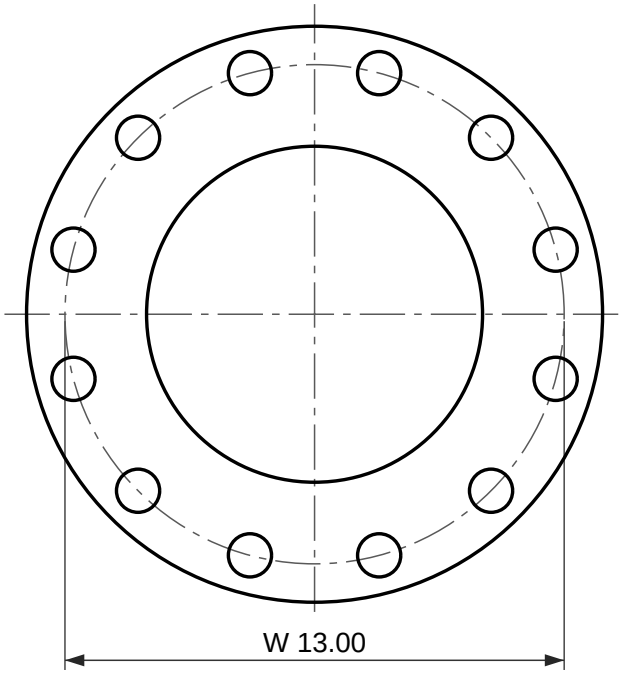

12 holes Ø1.12
Face view

Lap joint flange, ASME B16.5 Class 400

NPS 8 (DN 200)

Dimensions per ASME B16.5-2025, inches and millimetres as the standard's own tables give them.
Lap joint flange: no raised face; it seats on the stub end lap.
Reference drawing. The purchase order and ASME B16.5 govern. Check the latest edition.
Generated at rajendradatacenter.us/flanges/high-pressure/

Dimension	in	mm
O Outside diameter	15.00	381
tf Flange thickness	1.88	47.8
Y Length through hub	2.69	68
X Hub diameter at base	10.25	260
B Bore	8.75	222.2
r Corner radius of bore	0.50	13
W Bolt circle diameter	13.00	330.2
h Bolt holes, 12 off	1.12	28.6

12 stud bolts of 1 in; holes 1.12 in (28.6 mm)

RAJENDRA INDUSTRIAL CORPORATION
rajendradatacenter.us
Drawing RIC-B165-LJ400-8
Scale 1:5 on Letter
Units: inches (mm)
Date 2026-11-22
Quote: rajendradatacenter.us/rfq/
sales@rajendradatacenter.com
+91 74338 71355