Approx. weight

Material	lb	kg
Carbon steel	37.5	17.0
Stainless steel 304 and 304L	37.8	17.1
Stainless steel 316 and 316L	38.2	17.3

Densities 7.85, 7.9 and 8.0 g/cm3.
Calculated from the dimensions as the standard gives them, with no allowance for tolerance.

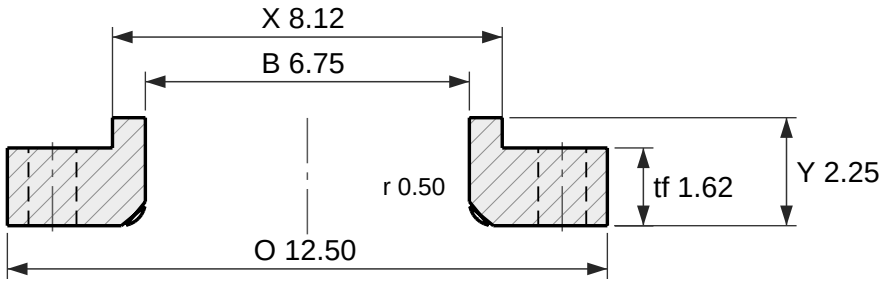

Section

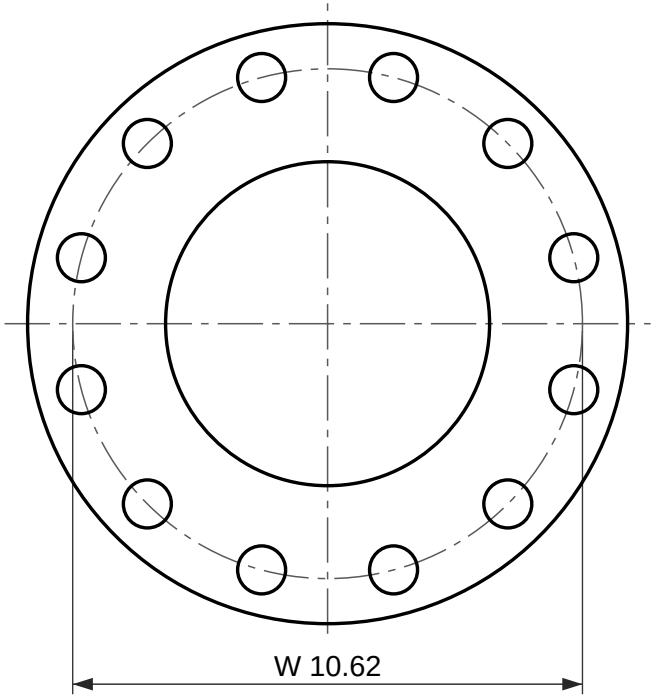

12 holes Ø1.00

Face view

Lap joint flange, ASME B16.5 Class 400

NPS 6 (DN 150)

Dimensions per ASME B16.5-2025, inches and millimetres as the standard's own tables give them.
Lap joint flange: no raised face; it seats on the stub end lap.
Reference drawing. The purchase order and ASME B16.5 govern. Check the latest edition.
Generated at rajendradatacenter.us/flanges/high-pressure/

Dimension	in	mm
O Outside diameter	12.50	318
tf Flange thickness	1.62	41.1
Y Length through hub	2.25	57
X Hub diameter at base	8.12	206
B Bore	6.75	171.4
r Corner radius of bore	0.50	13
W Bolt circle diameter	10.62	269.7
h Bolt holes, 12 off	1.00	25.4

12 stud bolts of 7/8 in; holes 1.00 in (25.4 mm)

RAJENDRA INDUSTRIAL CORPORATION
rajendradatacenter.us
Drawing RIC-B165-LJ400-6
Scale 1:4 on Letter
Units: inches (mm)
Date 2026-11-22
Quote: rajendradatacenter.us/rfq/
sales@rajendradatacenter.com
+91 74338 71355