Approx. weight

Material	lb	kg
Carbon steel	10.9	4.9
Stainless steel 304 and 304L	11.0	5.0
Stainless steel 316 and 316L	11.1	5.0

Densities 7.85, 7.9 and 8.0 g/cm3.
Calculated from the dimensions as the standard gives them, with no allowance for tolerance.

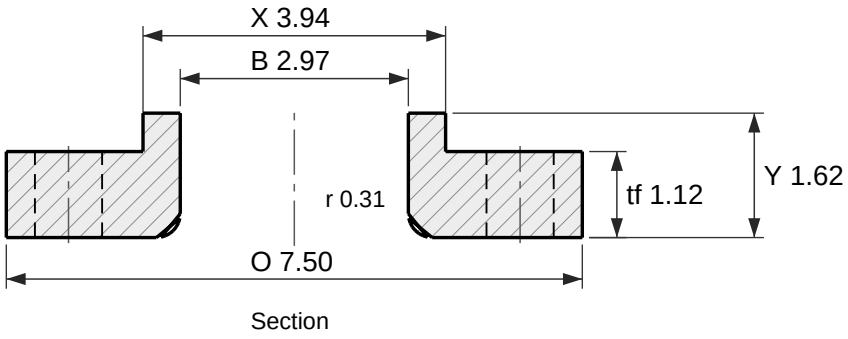

Section

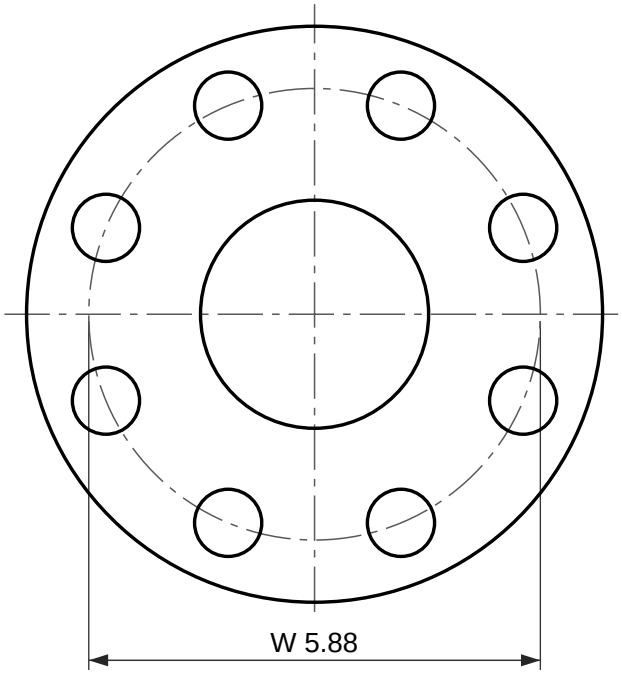

8 holes Ø0.88
Face view

Lap joint flange, ASME B16.5 Class 400

NPS 2-1/2 (DN 65)

Dimensions per ASME B16.5-2025, inches and millimetres as the standard's own tables give them. Note 5 of the Class 400 table: use the Class 600 dimensions in this size.
Lap joint flange: no raised face; it seats on the stub end lap.
Reference drawing. The purchase order and ASME B16.5 govern. Check the latest edition.
Generated at rajendradatacenter.us/flanges/high-pressure/

Dimension	in	mm
O Outside diameter	7.50	190
tf Flange thickness	1.12	28.4
Y Length through hub	1.62	41
X Hub diameter at base	3.94	100
B Bore	2.97	75.4
r Corner radius of bore	0.31	8
W Bolt circle diameter	5.88	149.4
h Bolt holes, 8 off	0.88	22.2

8 stud bolts of 3/4 in; holes 0.88 in (22.2 mm)

RAJENDRA INDUSTRIAL CORPORATION
rajendradatacenter.us
Drawing RIC-B165-LJ400-2.5
Scale 1:2.5 on Letter
Units: inches (mm)
Date 2026-11-22
Quote: rajendradatacenter.us/rfq/
sales@rajendradatacenter.com
+91 74338 71355