Approx. weight

Material	lb	kg
Carbon steel	3.2	1.5
Stainless steel 304 and 304L	3.2	1.5
Stainless steel 316 and 316L	3.3	1.5

Densities 7.85, 7.9 and 8.0 g/cm3.
Calculated from the dimensions as the standard gives them, with no allowance for tolerance.

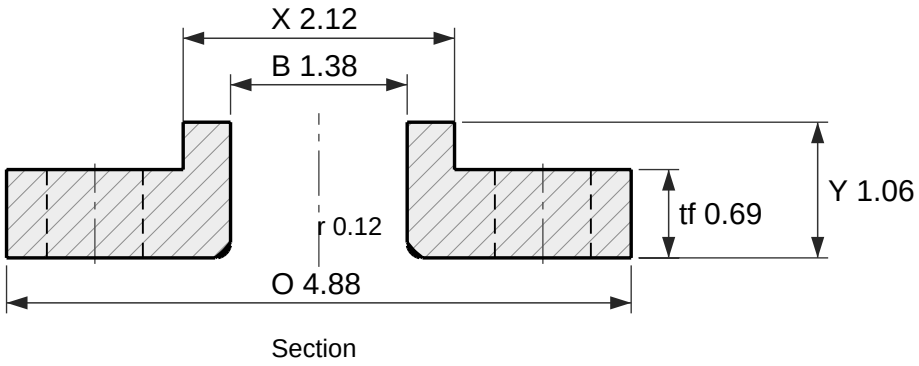

Section

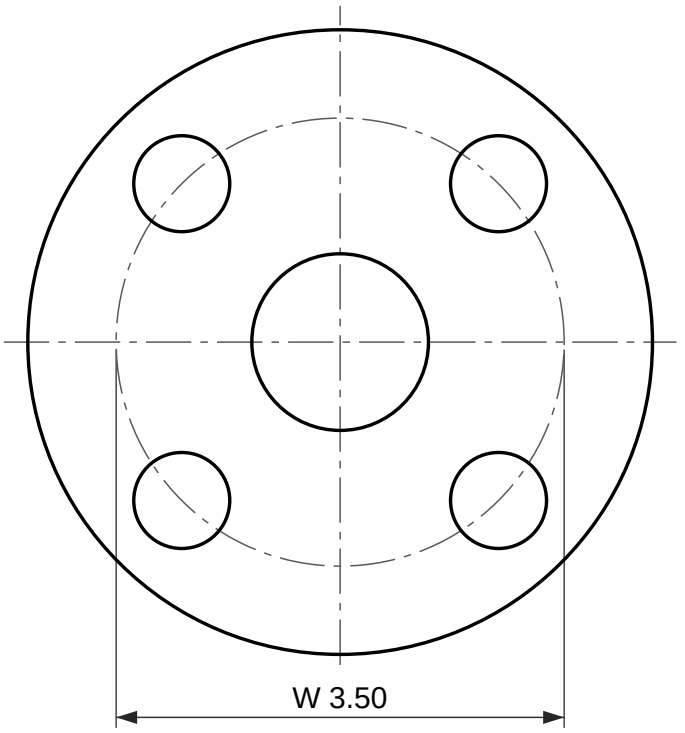

4 holes Ø0.75

Face view

Lap joint flange, ASME B16.5 Class 400

NPS 1 (DN 25)

Dimensions per ASME B16.5-2025, inches and millimetres as the standard's own tables give them. Note 5 of the Class 400 table: use the Class 600 dimensions in this size.
Lap joint flange: no raised face; it seats on the stub end lap.
Reference drawing. The purchase order and ASME B16.5 govern. Check the latest edition.
Generated at rajendradatacenter.us/flanges/high-pressure/

Dimension	in	mm
O Outside diameter	4.88	124
tf Flange thickness	0.69	17.5
Y Length through hub	1.06	27
X Hub diameter at base	2.12	54
B Bore	1.38	35.1
r Corner radius of bore	0.12	3
W Bolt circle diameter	3.50	88.9
h Bolt holes, 4 off	0.75	19.1

4 stud bolts of 5/8 in; holes 0.75 in (19.1 mm)

RAJENDRA INDUSTRIAL CORPORATION
rajendradatacenter.us
Drawing RIC-B165-LJ400-1
Scale 1:1.5 on Letter
Units: inches (mm)
Date 2026-11-22
Quote: rajendradatacenter.us/rfq/
sales@rajendradatacenter.com
+91 74338 71355