Approx. weight

Material	lb	kg
Carbon steel	6.2	2.8
Stainless steel 304 and 304L	6.3	2.8
Stainless steel 316 and 316L	6.3	2.9

Densities 7.85, 7.9 and 8.0 g/cm3.
Calculated from the dimensions as the standard gives them, with no allowance for tolerance.

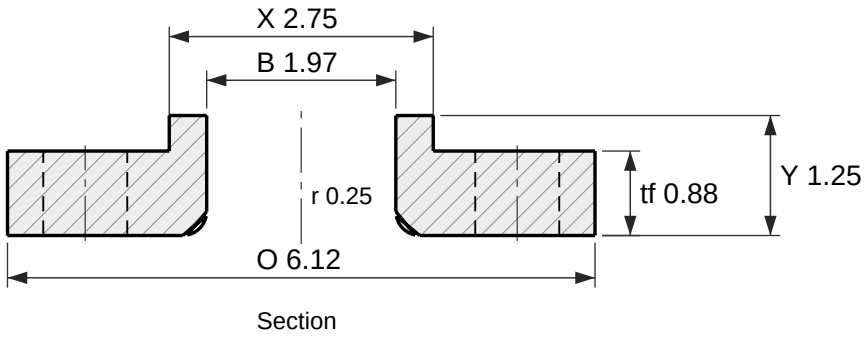

Section

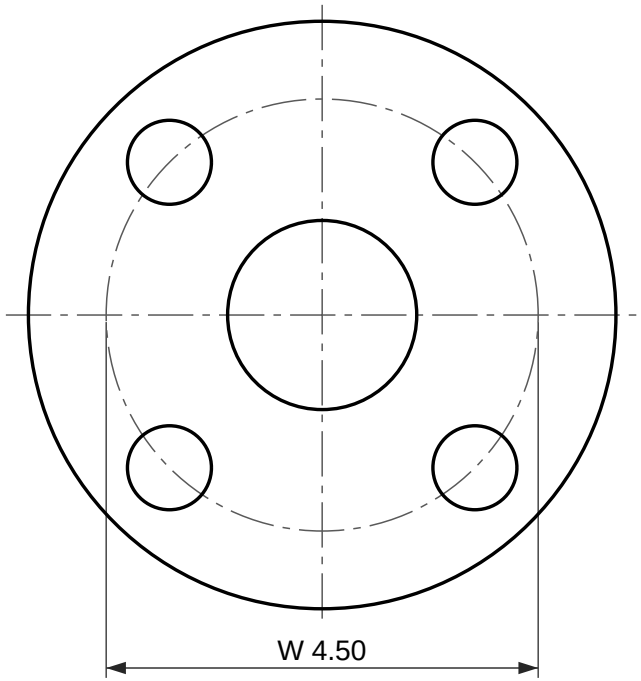

4 holes Ø0.88
Face view

Lap joint flange, ASME B16.5 Class 400

NPS 1-1/2 (DN 40)

Dimensions per ASME B16.5-2025, inches and millimetres as the standard's own tables give them. Note 5 of the Class 400 table: use the Class 600 dimensions in this size.
Lap joint flange: no raised face; it seats on the stub end lap.
Reference drawing. The purchase order and ASME B16.5 govern. Check the latest edition.
Generated at rajendradatacenter.us/flanges/high-pressure/

Dimension	in	mm
O Outside diameter	6.12	155
tf Flange thickness	0.88	22.4
Y Length through hub	1.25	32
X Hub diameter at base	2.75	70
B Bore	1.97	50
r Corner radius of bore	0.25	6
W Bolt circle diameter	4.50	114.3
h Bolt holes, 4 off	0.88	22.2

4 stud bolts of 3/4 in; holes 0.88 in (22.2 mm)

RAJENDRA INDUSTRIAL CORPORATION
rajendradatacenter.us
Drawing RIC-B165-LJ400-1.5
Scale 1:2 on Letter
Units: inches (mm)
Date 2026-11-22
Quote: rajendradatacenter.us/rfq/
sales@rajendradatacenter.com
+91 74338 71355