Approx. weight

Material	lb	kg
Carbon steel	410	186
Stainless steel 304 and 304L	413	187
Stainless steel 316 and 316L	418	190

Densities 7.85, 7.9 and 8.0 g/cm3.
Calculated from the dimensions as the standard gives them, with no allowance for tolerance.

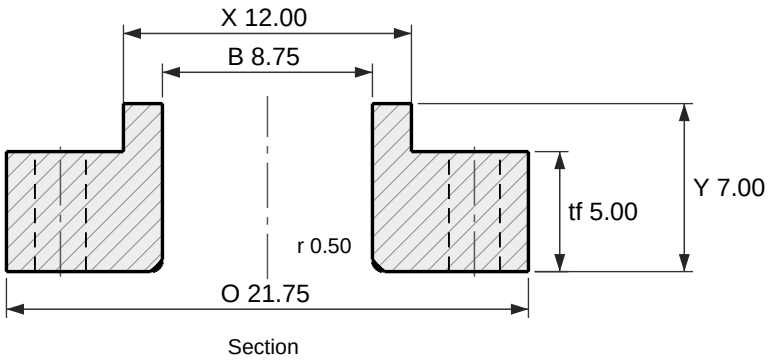

Section

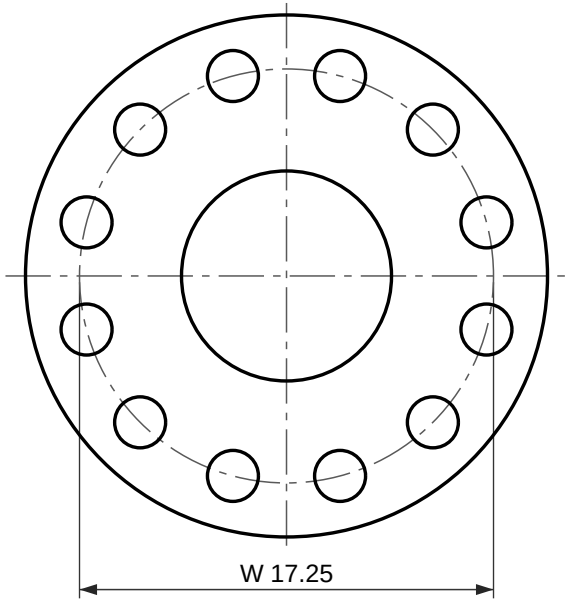

12 holes Ø2.12
Face view

Lap joint flange, ASME B16.5 Class 2500

NPS 8 (DN 200)

Dimensions per ASME B16.5-2025, inches and millimetres as the standard's own tables give them.
Lap joint flange: no raised face; it seats on the stub end lap.
Reference drawing. The purchase order and ASME B16.5 govern. Check the latest edition.
Generated at rajendradatacenter.us/flanges/high-pressure/

Dimension	in	mm
O Outside diameter	21.75	552
tf Flange thickness	5.00	127.0
Y Length through hub	7.00	178
X Hub diameter at base	12.00	305
B Bore	8.75	222.2
r Corner radius of bore	0.50	13
W Bolt circle diameter	17.25	438.2
h Bolt holes, 12 off	2.12	54.0

12 stud bolts of 2 in; holes 2.12 in (54.0 mm)

RAJENDRA INDUSTRIAL CORPORATION
rajendradatacenter.us
Drawing RIC-B165-LJ2500-8
Scale 1:8 on Letter
Units: inches (mm)
Date 2026-11-22
Quote: rajendradatacenter.us/rfq/
sales@rajendradatacenter.com
+91 74338 71355