Approx. weight

Material	lb	kg
Carbon steel	279	127
Stainless steel 304 and 304L	281	127
Stainless steel 316 and 316L	284	129

Densities 7.85, 7.9 and 8.0 g/cm3.
Calculated from the dimensions as the standard gives them, with no allowance for tolerance.

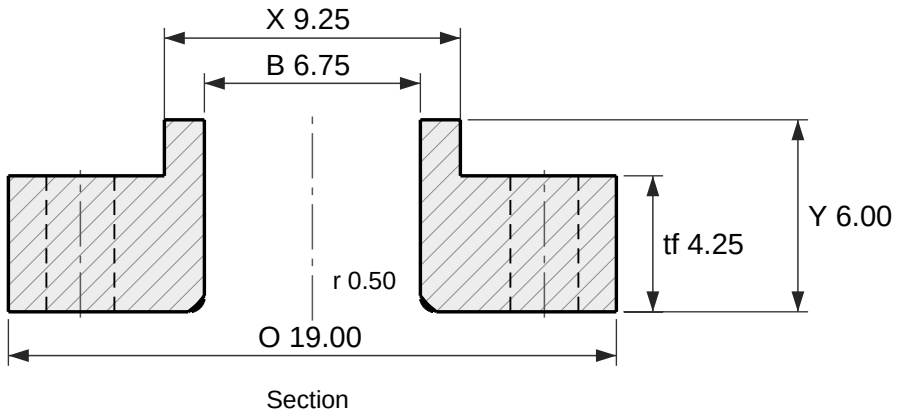

Section

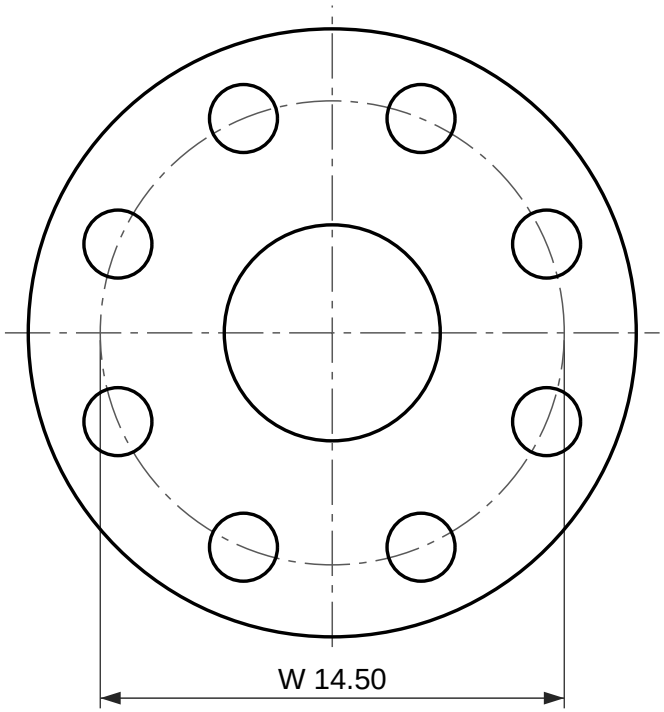

8 holes Ø2.12

Face view

Lap joint flange, ASME B16.5 Class 2500

NPS 6 (DN 150)

Dimensions per ASME B16.5-2025, inches and millimetres as the standard's own tables give them.
Lap joint flange: no raised face; it seats on the stub end lap.
Reference drawing. The purchase order and ASME B16.5 govern. Check the latest edition.
Generated at rajendradatacenter.us/flanges/high-pressure/

Dimension	in	mm
O Outside diameter	19.00	483
tf Flange thickness	4.25	108.0
Y Length through hub	6.00	152
X Hub diameter at base	9.25	235
B Bore	6.75	171.4
r Corner radius of bore	0.50	13
W Bolt circle diameter	14.50	368.3
h Bolt holes, 8 off	2.12	54.0

8 stud bolts of 2 in; holes 2.12 in (54.0 mm)

RAJENDRA INDUSTRIAL CORPORATION
rajendradatacenter.us
Drawing RIC-B165-LJ2500-6
Scale 1:6 on Letter
Units: inches (mm)
Date 2026-11-22
Quote: rajendradatacenter.us/rfq/
sales@rajendradatacenter.com
+91 74338 71355