Approx. weight

Material	lb	kg
Carbon steel	778	353
Stainless steel 304 and 304L	783	355
Stainless steel 316 and 316L	792	359

Densities 7.85, 7.9 and 8.0 g/cm3.
Calculated from the dimensions as the standard gives them, with no allowance for tolerance.

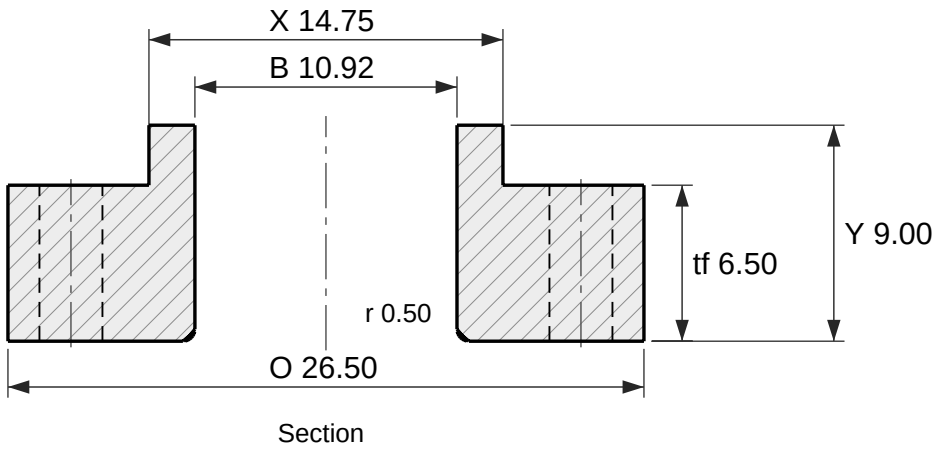

Section

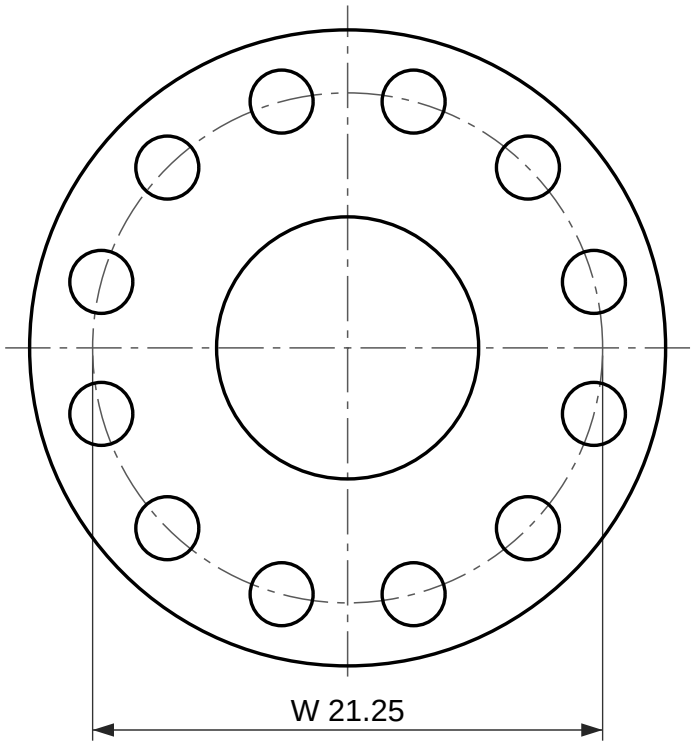

12 holes Ø2.62

Face view

Lap joint flange, ASME B16.5 Class 2500

NPS 10 (DN 250)

Dimensions per ASME B16.5-2025, inches and millimetres as the standard's own tables give them.
Lap joint flange: no raised face; it seats on the stub end lap.
Reference drawing. The purchase order and ASME B16.5 govern. Check the latest edition.
Generated at rajendradatacenter.us/flanges/high-pressure/

Dimension	in	mm
O Outside diameter	26.50	673
tf Flange thickness	6.50	165.1
Y Length through hub	9.00	229
X Hub diameter at base	14.75	375
B Bore	10.92	277.4
r Corner radius of bore	0.50	13
W Bolt circle diameter	21.25	539.8
h Bolt holes, 12 off	2.62	66.7

12 stud bolts of 2-1/2 in; holes 2.62 in (66.7 mm)

RAJENDRA INDUSTRIAL CORPORATION

rajendradatacenter.us
Drawing RIC-B165-LJ2500-10
Scale 1:8 on Letter
Units: inches (mm)
Date 2026-11-22
Quote: rajendradatacenter.us/rfq/
sales@rajendradatacenter.com
+91 74338 71355