Approx. weight

Material	lb	kg
Carbon steel	223	101
Stainless steel 304 and 304L	225	102
Stainless steel 316 and 316L	228	103

Densities 7.85, 7.9 and 8.0 g/cm3.
Calculated from the dimensions as the standard gives them, with no allowance for tolerance.

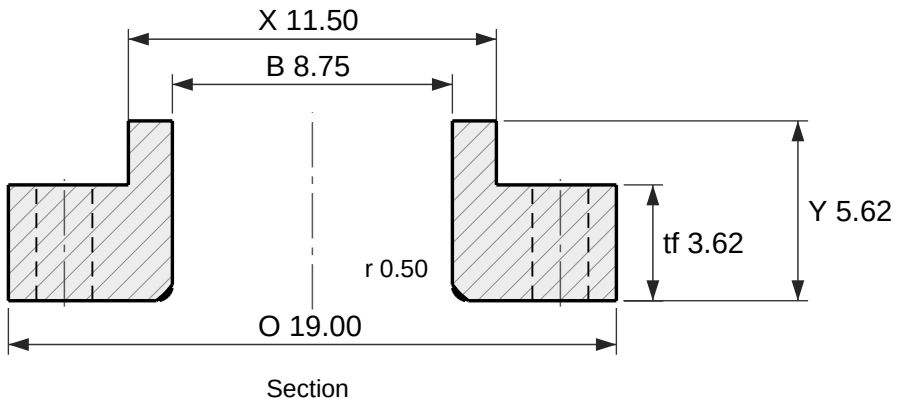

Section

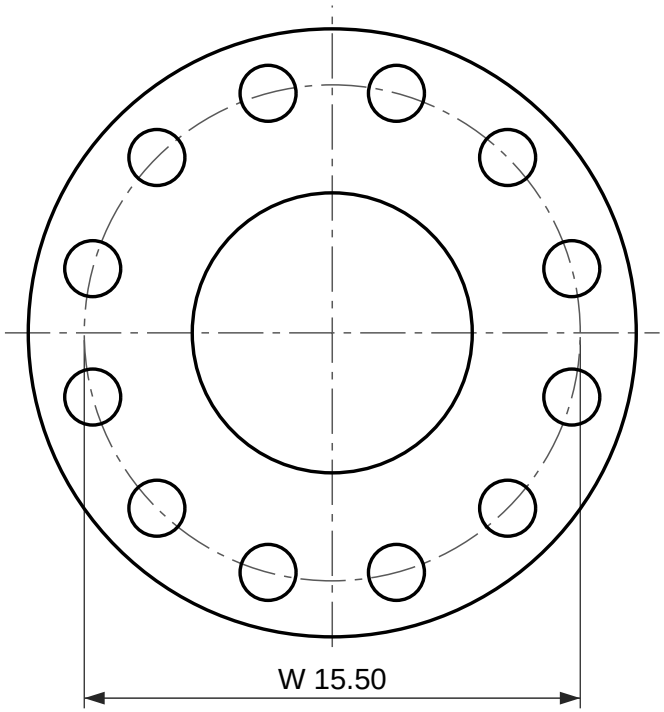

12 holes Ø1.75
Face view

Lap joint flange, ASME B16.5 Class 1500

NPS 8 (DN 200)

Dimensions per ASME B16.5-2025, inches and millimetres as the standard's own tables give them.
Lap joint flange: no raised face; it seats on the stub end lap.
Reference drawing. The purchase order and ASME B16.5 govern. Check the latest edition.
Generated at rajendradatacenter.us/flanges/high-pressure/

Dimension	in	mm
O Outside diameter	19.00	483
tf Flange thickness	3.62	91.9
Y Length through hub	5.62	143
X Hub diameter at base	11.50	292
B Bore	8.75	222.2
r Corner radius of bore	0.50	13
W Bolt circle diameter	15.50	393.7
h Bolt holes, 12 off	1.75	44.5

12 stud bolts of 1-5/8 in; holes 1.75 in (44.5 mm)

RAJENDRA INDUSTRIAL CORPORATION
rajendradatacenter.us
Drawing RIC-B165-LJ1500-8
Scale 1:6 on Letter
Units: inches (mm)
Date 2026-11-22
Quote: rajendradatacenter.us/rfq/
sales@rajendradatacenter.com
+91 74338 71355