Approx. weight

Material	lb	kg
Carbon steel	112	50.9
Stainless steel 304 and 304L	113	51.2
Stainless steel 316 and 316L	114	51.9

Densities 7.85, 7.9 and 8.0 g/cm3.
Calculated from the dimensions as the standard gives them, with no allowance for tolerance.

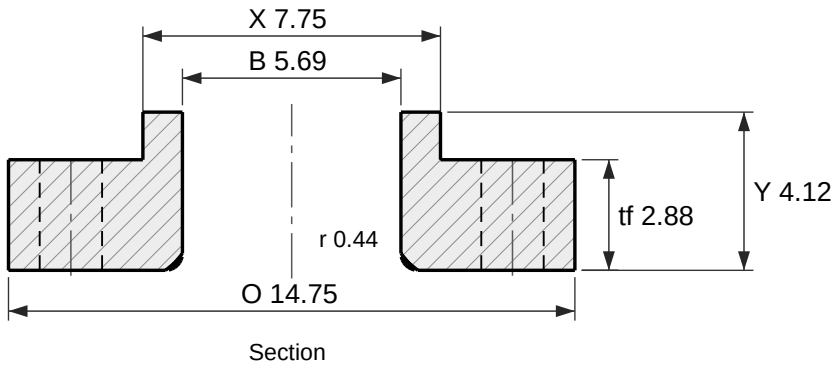

Section

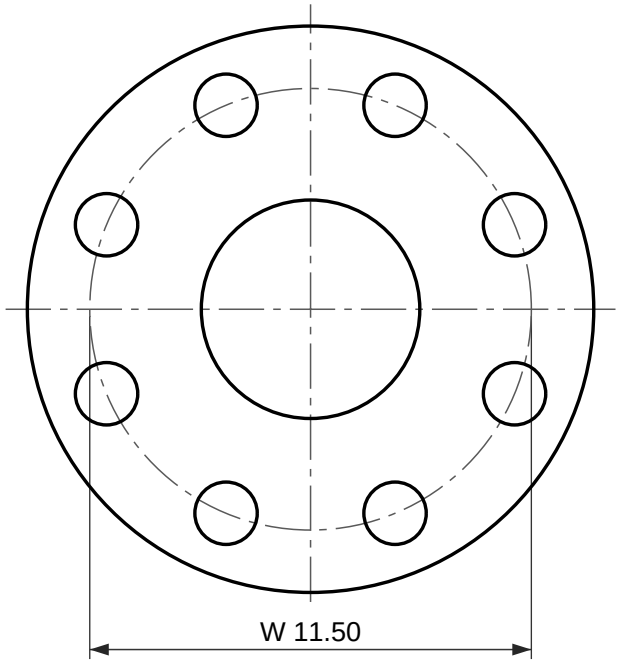

8 holes Ø1.62
Face view

Lap joint flange, ASME B16.5 Class 1500

NPS 5 (DN 125)

Dimensions per ASME B16.5-2025, inches and millimetres as the standard's own tables give them.
Lap joint flange: no raised face; it seats on the stub end lap.
Reference drawing. The purchase order and ASME B16.5 govern. Check the latest edition.
Generated at rajendradatacenter.us/flanges/high-pressure/

Dimension	in	mm
O Outside diameter	14.75	375
tf Flange thickness	2.88	73.2
Y Length through hub	4.12	105
X Hub diameter at base	7.75	197
B Bore	5.69	144.5
r Corner radius of bore	0.44	11
W Bolt circle diameter	11.50	292.1
h Bolt holes, 8 off	1.62	41.3

8 stud bolts of 1-1/2 in; holes 1.62 in (41.3 mm)

RAJENDRA INDUSTRIAL CORPORATION
rajendradatacenter.us
Drawing RIC-B165-LJ1500-5
Scale 1:5 on Letter
Units: inches (mm)
Date 2026-11-22
Quote: rajendradatacenter.us/rfq/
sales@rajendradatacenter.com
+91 74338 71355