Approx. weight

Material	lb	kg
Carbon steel	38.5	17.4
Stainless steel 304 and 304L	38.7	17.6
Stainless steel 316 and 316L	39.2	17.8

Densities 7.85, 7.9 and 8.0 g/cm3.
Calculated from the dimensions as the standard gives them, with no allowance for tolerance.

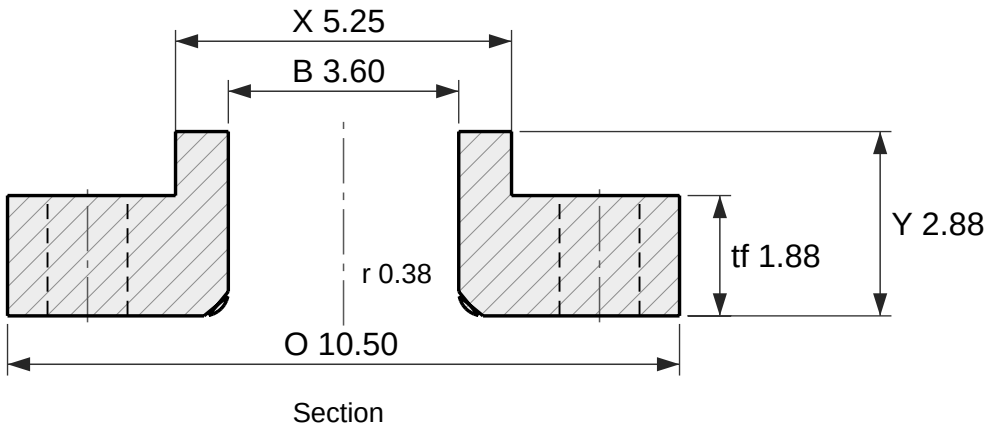

Section

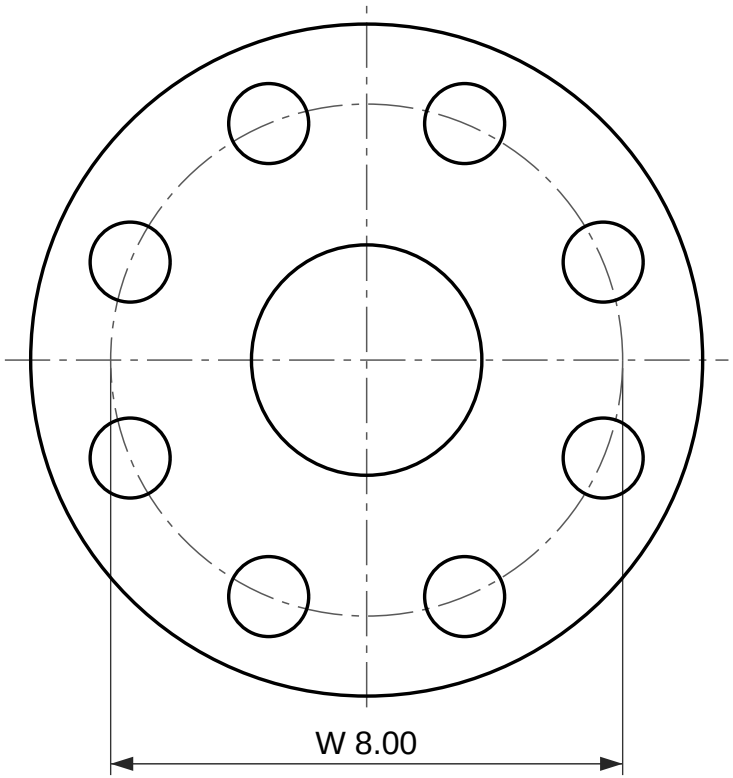

8 holes Ø1.25

Face view

Lap joint flange, ASME B16.5 Class 1500

NPS 3 (DN 80)

Dimensions per ASME B16.5-2025, inches and millimetres as the standard's own tables give them.
Lap joint flange: no raised face; it seats on the stub end lap.
Reference drawing. The purchase order and ASME B16.5 govern. Check the latest edition.
Generated at rajendradatacenter.us/flanges/high-pressure/

Dimension	in	mm
O Outside diameter	10.50	267
tf Flange thickness	1.88	47.8
Y Length through hub	2.88	73
X Hub diameter at base	5.25	133
B Bore	3.60	91.4
r Corner radius of bore	0.38	10
W Bolt circle diameter	8.00	203.2
h Bolt holes, 8 off	1.25	31.8

8 stud bolts of 1-1/8 in; holes 1.25 in (31.8 mm)

RAJENDRA INDUSTRIAL CORPORATION
rajendradatacenter.us
Drawing RIC-B165-LJ1500-3
Scale 1:3 on Letter
Units: inches (mm)
Date 2026-11-22
Quote: rajendradatacenter.us/rfq/
sales@rajendradatacenter.com
+91 74338 71355