Approx. weight

Material	lb	kg
Carbon steel	1683	764
Stainless steel 304 and 304L	1694	768
Stainless steel 316 and 316L	1716	778

Densities 7.85, 7.9 and 8.0 g/cm3.
Calculated from the dimensions as the standard gives them, with no allowance for tolerance.

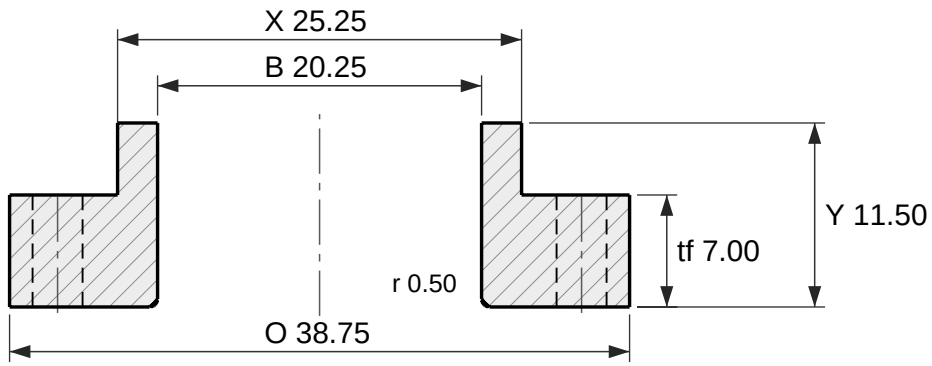

Section

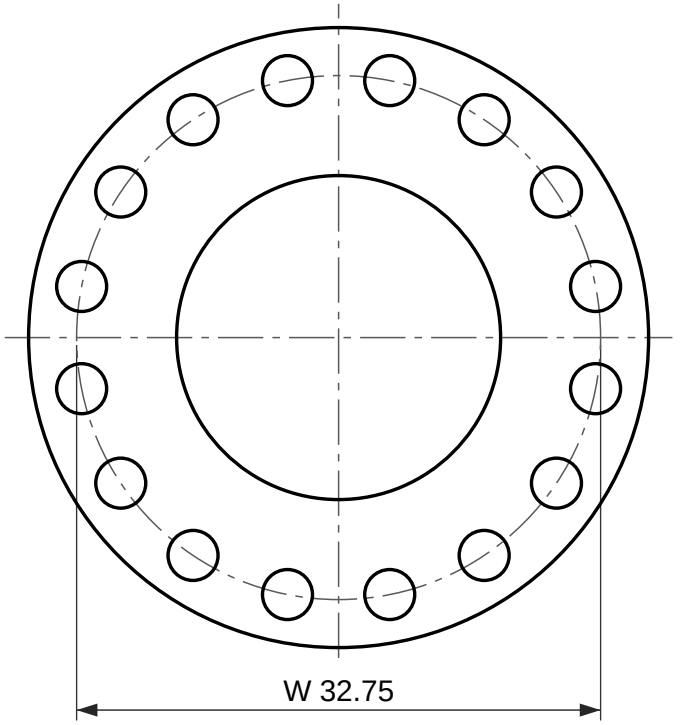

16 holes Ø3.12

Face view

Lap joint flange, ASME B16.5 Class 1500

NPS 20 (DN 500)

Dimensions per ASME B16.5-2025, inches and millimetres as the standard's own tables give them.
Lap joint flange: no raised face; it seats on the stub end lap.
Reference drawing. The purchase order and ASME B16.5 govern. Check the latest edition.
Generated at rajendradatacenter.us/flanges/high-pressure/

Dimension	in	mm
O Outside diameter	38.75	984
tf Flange thickness	7.00	177.8
Y Length through hub	11.50	292
X Hub diameter at base	25.25	641
B Bore	20.25	514.4
r Corner radius of bore	0.50	13
W Bolt circle diameter	32.75	831.8
h Bolt holes, 16 off	3.12	79.4

16 stud bolts of 3 in; holes 3.12 in (79.4 mm)

RAJENDRA INDUSTRIAL CORPORATION
rajendradatacenter.us
Drawing RIC-B165-LJ1500-20
Scale 1:12 on Letter
Units: inches (mm)
Date 2026-11-22
Quote: rajendradatacenter.us/rfq/
sales@rajendradatacenter.com
+91 74338 71355