Approx. weight

Material	lb	kg
Carbon steel	29.3	13.3
Stainless steel 304 and 304L	29.5	13.4
Stainless steel 316 and 316L	29.9	13.6

Densities 7.85, 7.9 and 8.0 g/cm3.
Calculated from the dimensions as the standard gives them, with no allowance for tolerance.

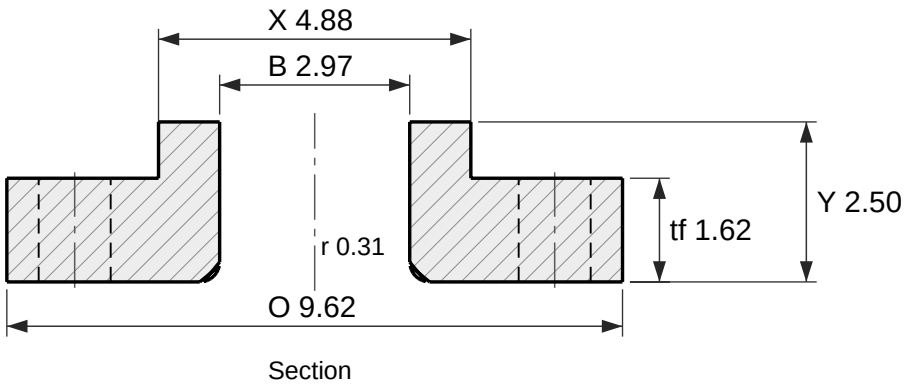

Section

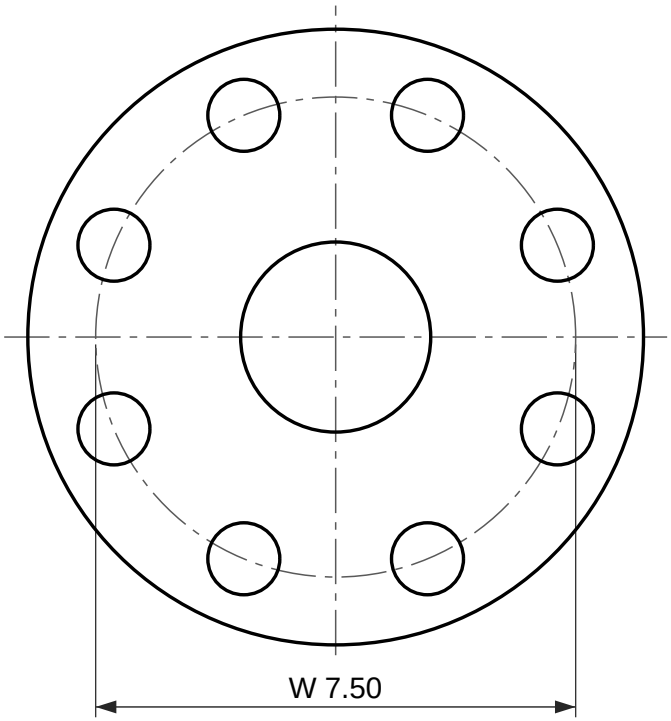

8 holes Ø1.12

Face view

Lap joint flange, ASME B16.5 Class 1500

NPS 2-1/2 (DN 65)

Dimensions per ASME B16.5-2025, inches and millimetres as the standard's own tables give them.
Lap joint flange: no raised face; it seats on the stub end lap.
Reference drawing. The purchase order and ASME B16.5 govern. Check the latest edition.
Generated at rajendradatacenter.us/flanges/high-pressure/

Dimension	in	mm
O Outside diameter	9.62	244
tf Flange thickness	1.62	41.1
Y Length through hub	2.50	64
X Hub diameter at base	4.88	124
B Bore	2.97	75.4
r Corner radius of bore	0.31	8
W Bolt circle diameter	7.50	190.5
h Bolt holes, 8 off	1.12	28.6

8 stud bolts of 1 in; holes 1.12 in (28.6 mm)

RAJENDRA INDUSTRIAL CORPORATION

rajendradatacenter.us
Drawing RIC-B165-LJ1500-2.5
Scale 1:3 on Letter
Units: inches (mm)
Date 2026-11-22
Quote: rajendradatacenter.us/rfq/
sales@rajendradatacenter.com
+91 74338 71355