Approx. weight

Material	lb	kg
Carbon steel	1085	492
Stainless steel 304 and 304L	1092	495
Stainless steel 316 and 316L	1106	502

Densities 7.85, 7.9 and 8.0 g/cm3.
Calculated from the dimensions as the standard gives them, with no allowance for tolerance.

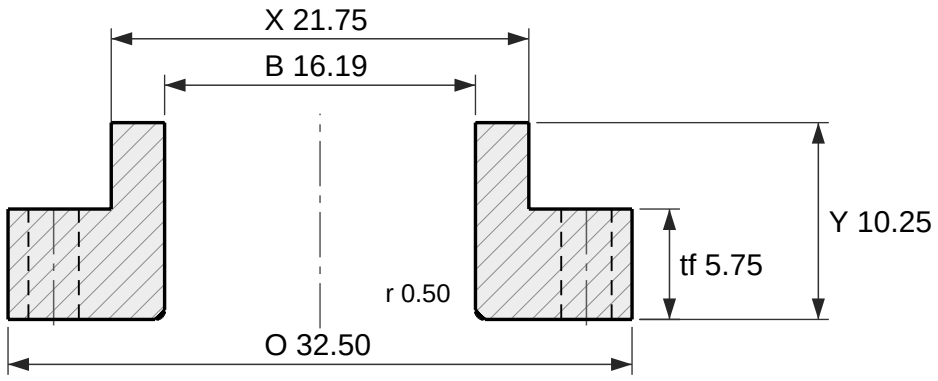

Section

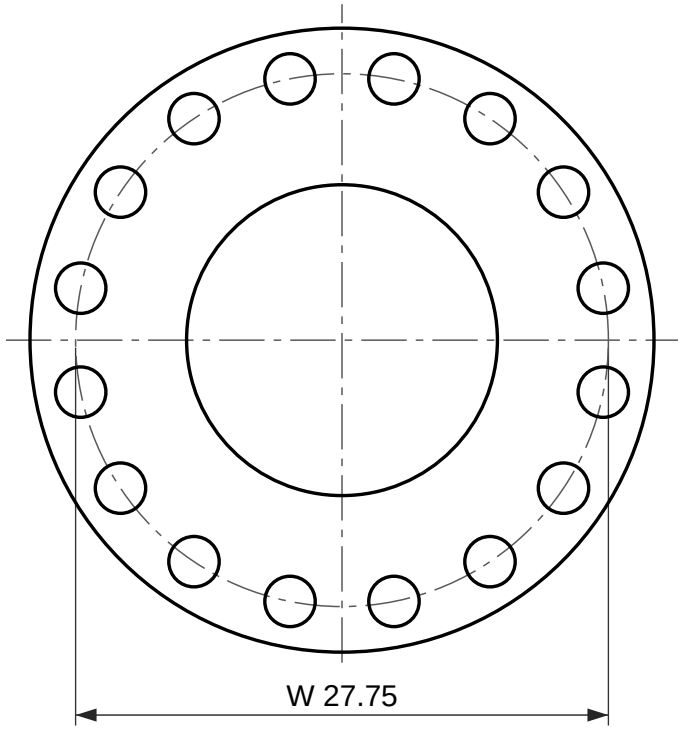

16 holes Ø2.62

Face view

Lap joint flange, ASME B16.5 Class 1500

NPS 16 (DN 400)

Dimensions per ASME B16.5-2025, inches and millimetres as the standard's own tables give them.
Lap joint flange: no raised face; it seats on the stub end lap.
Reference drawing. The purchase order and ASME B16.5 govern. Check the latest edition.
Generated at rajendradatacenter.us/flanges/high-pressure/

Dimension	in	mm
O Outside diameter	32.50	826
tf Flange thickness	5.75	146.1
Y Length through hub	10.25	260
X Hub diameter at base	21.75	552
B Bore	16.19	411.2
r Corner radius of bore	0.50	13
W Bolt circle diameter	27.75	704.8
h Bolt holes, 16 off	2.62	66.7

16 stud bolts of 2-1/2 in; holes 2.62 in (66.7 mm)

RAJENDRA INDUSTRIAL CORPORATION

rajendradatacenter.us
Drawing RIC-B165-LJ1500-16
Scale 1:10 on Letter
Units: inches (mm)
Date 2026-11-22
Quote: rajendradatacenter.us/rfq/
sales@rajendradatacenter.com
+91 74338 71355