Approx. weight

Material	lb	kg
Carbon steel	3.8	1.7
Stainless steel 304 and 304L	3.8	1.7
Stainless steel 316 and 316L	3.8	1.7

Densities 7.85, 7.9 and 8.0 g/cm3.
Calculated from the dimensions as the standard gives them, with no allowance for tolerance.

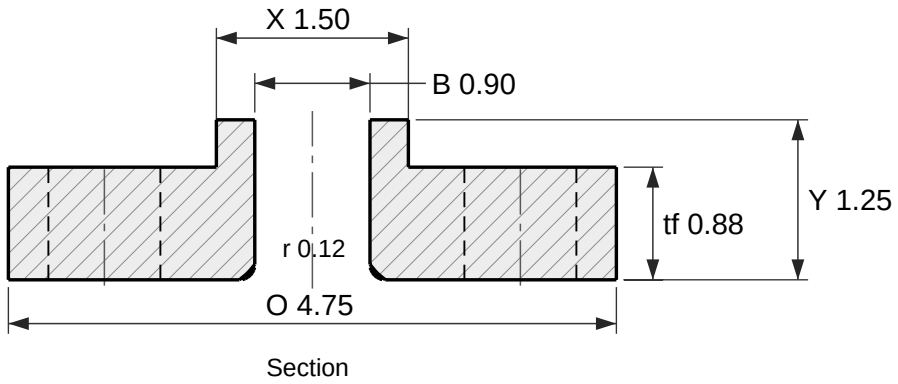

Section

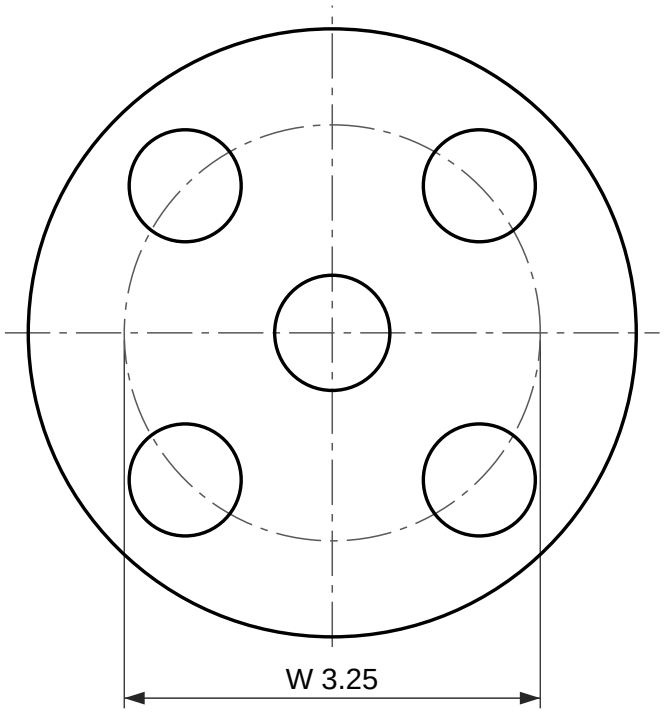

4 holes Ø0.88

Face view

Lap joint flange, ASME B16.5 Class 1500

NPS 1/2 (DN 15)

Dimensions per ASME B16.5-2025, inches and millimetres as the standard's own tables give them.
Lap joint flange: no raised face; it seats on the stub end lap.
Reference drawing. The purchase order and ASME B16.5 govern. Check the latest edition.
Generated at rajendradatacenter.us/flanges/high-pressure/

Dimension	in	mm
O Outside diameter	4.75	121
tf Flange thickness	0.88	22.4
Y Length through hub	1.25	32
X Hub diameter at base	1.50	38
B Bore	0.90	22.9
r Corner radius of bore	0.12	3
W Bolt circle diameter	3.25	82.6
h Bolt holes, 4 off	0.88	22.2

4 stud bolts of 3/4 in; holes 0.88 in (22.2 mm)

RAJENDRA INDUSTRIAL CORPORATION
rajendradatacenter.us
Drawing RIC-B165-LJ1500-0.5
Scale 1:1.5 on Letter
Units: inches (mm)
Date 2026-11-22
Quote: rajendradatacenter.us/rfq/
sales@rajendradatacenter.com
+91 74338 71355