Approx. weight

Material	lb	kg
Carbon steel	218	98.8
Stainless steel 304 and 304L	219	99.4
Stainless steel 316 and 316L	222	101

Densities 7.85, 7.9 and 8.0 g/cm3.
Calculated from the dimensions as the standard gives them, with no allowance for tolerance.

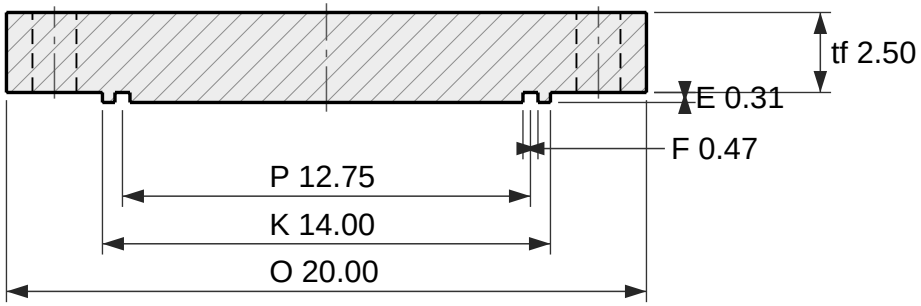

Section

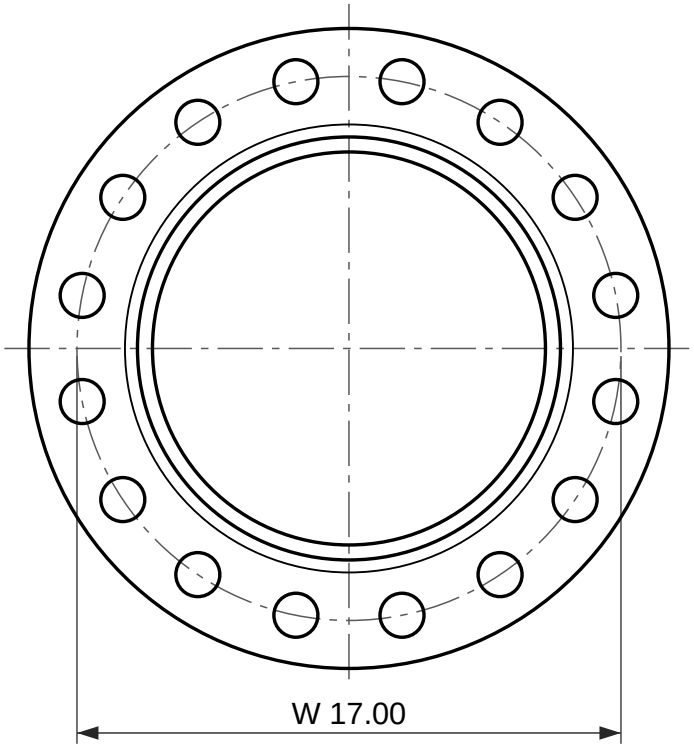

16 holes Ø1.38

Face view

Blind flange, ASME B16.5 Class 600 RJ

NPS 10 (DN 250)

Dimensions per ASME B16.5-2025, inches and millimetres as the standard's own tables give them.
Ring joint facing to ASME B16.5 Table 5, ring and groove number R53. The raised portion stands E above the flange, the same as the depth of the groove, so the bottom of the groove is level with the flange face. Ring joint gasket dimensions are to ASME B16.20 (clause 6.11.1).
tf is the ASME B16.5 dimension, measured without the raised portion; the tf + E row is the same flange measured over the facing.
Reference drawing. The purchase order and ASME B16.5 govern. Check the latest edition.
Generated at rajendradatacenter.us/flanges/ring-type-joint/

Dimension		in	mm
O	Outside diameter	20.00	508
K	Diameter of the raised portion	14.00	356
E	Depth of the groove, and the raised portion	0.31	7.92
P	Pitch diameter of the groove	12.75	323.85
F	Width of the groove	0.47	11.91
r	Radius at the bottom of the groove	0.03	0.8
tf	Thickness (min), without the raised portion	2.50	63.5
tf + E	Thickness over the raised portion	2.81	71.4
W	Bolt circle diameter	17.00	431.8
h	Bolt holes, 16 off	1.38	34.9

16 stud bolts of 1-1/4 in; holes 1.38 in (34.9 mm)

RAJENDRA INDUSTRIAL CORPORATION
rajendradatacenter.us
Drawing RIC-B165-BL600RJ-10
Scale 1:6 on Letter
Units: inches (mm)
Date 2026-11-22
Quote: rajendradatacenter.us/rfq/
sales@rajendradatacenter.com
+91 74338 71355