Approx. weight

Material	lb	kg
Carbon steel	318	144
Stainless steel 304 and 304L	320	145
Stainless steel 316 and 316L	324	147

Densities 7.85, 7.9 and 8.0 g/cm3.
Calculated from the dimensions as the standard gives them, with no allowance for tolerance.

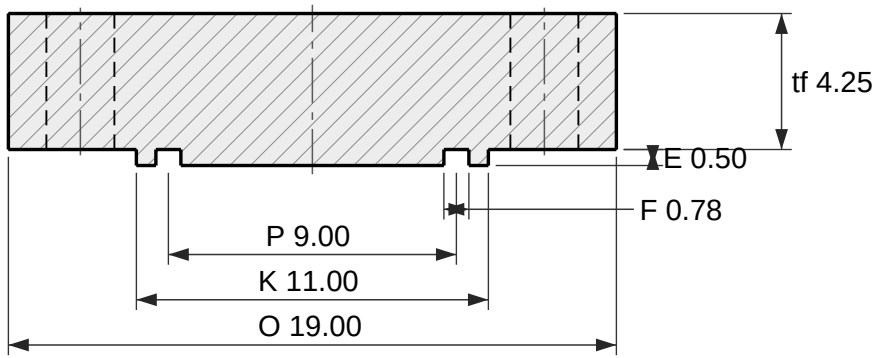

Section

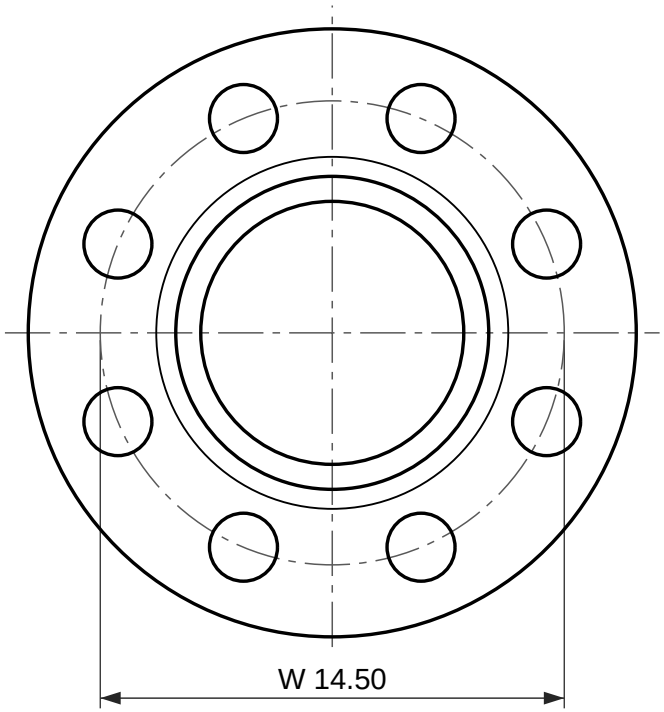

8 holes Ø2.12

Face view

Blind flange, ASME B16.5 Class 2500 RJ

NPS 6 (DN 150)

Dimensions per ASME B16.5-2025, inches and millimetres as the standard's own tables give them.
Ring joint facing to ASME B16.5 Table 5, ring and groove number R47. The raised portion stands E above the flange, the same as the depth of the groove, so the bottom of the groove is level with the flange face. Ring joint gasket dimensions are to ASME B16.20 (clause 6.11.1).
tf is the ASME B16.5 dimension, measured without the raised portion; the tf + E row is the same flange measured over the facing.
Reference drawing. The purchase order and ASME B16.5 govern. Check the latest edition.
Generated at rajendradatacenter.us/flanges/ring-type-joint/

Dimension	in	mm
O Outside diameter	19.00	483
K Diameter of the raised portion	11.00	279
E Depth of the groove, and the raised portion	0.50	12.7
P Pitch diameter of the groove	9.00	228.6
F Width of the groove	0.78	19.84
r Radius at the bottom of the groove	0.06	1.5
tf Thickness (min), without the raised portion	4.25	108
tf + E Thickness over the raised portion	4.75	120.7
W Bolt circle diameter	14.50	368.3
h Bolt holes, 8 off	2.12	54.0

8 stud bolts of 2 in; holes 2.12 in (54.0 mm)

RAJENDRA INDUSTRIAL CORPORATION

rajendradatacenter.us
Drawing RIC-B165-BL2500RJ-6
Scale 1:6 on Letter
Units: inches (mm)
Date 2026-11-22
Quote: rajendradatacenter.us/rfq/
sales@rajendradatacenter.com
+91 74338 71355