Approx. weight

Material	lb	kg
Carbon steel	28.9	13.1
Stainless steel 304 and 304L	29.1	13.2
Stainless steel 316 and 316L	29.4	13.3

Densities 7.85, 7.9 and 8.0 g/cm3.
Calculated from the dimensions as the standard gives them, with no allowance for tolerance.

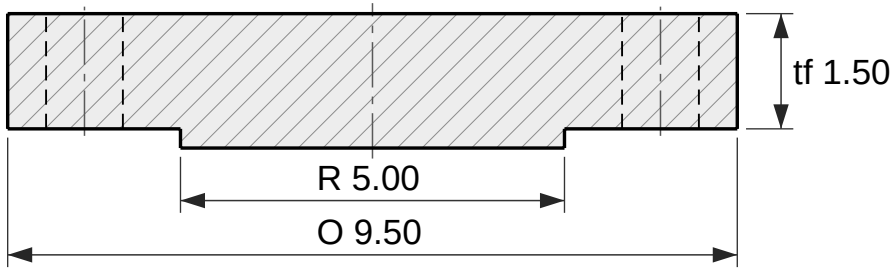

Section

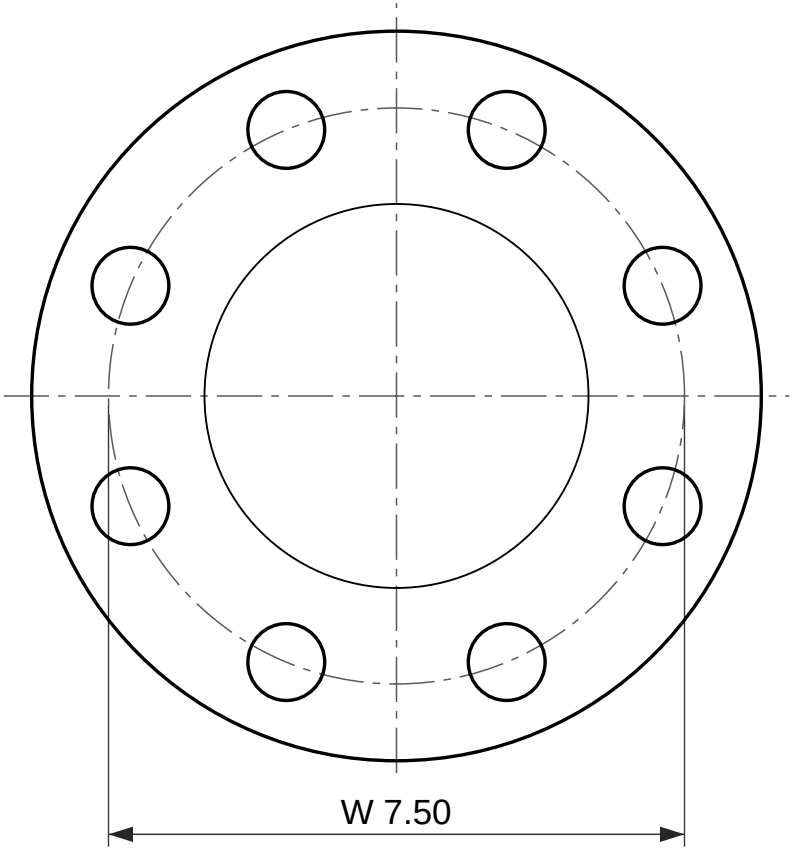

8 holes Ø1.00

Face view

Blind flange, ASME B16.5 Class 900 RF

NPS 3 (DN 80)

Dimensions per ASME B16.5-2025, inches and millimetres as the standard's own tables give them.
tf is the ASME B16.5 dimension, measured without the 0.25 in (6.4 mm) raised face; the tf + f row is the same flange measured over the face, which is what most catalogs print.
Reference drawing. The purchase order and ASME B16.5 govern. Check the latest edition.
Generated at rajendradatacenter.us/flanges/high-pressure/

Dimension	in	mm
O Outside diameter	9.50	241
R Raised face diameter	5.00	127
f Raised face height	0.25	6.4
tf Thickness (min), without raised face	1.50	38.1
tf + f Thickness over the raised face	1.75	44.5
W Bolt circle diameter	7.50	190.5
h Bolt holes, 8 off	1.00	25.4

8 stud bolts of 7/8 in; holes 1.00 in (25.4 mm)

RAJENDRA INDUSTRIAL CORPORATION

rajendradatacenter.us
Drawing RIC-B165-BL900-3
Scale 1:2.5 on Letter
Units: inches (mm)
Date 2026-11-22
Quote: rajendradatacenter.us/rfq/
sales@rajendradatacenter.com
+91 74338 71355