Approx. weight

Material	lb	kg
Carbon steel	12.7	5.8
Stainless steel 304 and 304L	12.8	5.8
Stainless steel 316 and 316L	12.9	5.9

Densities 7.85, 7.9 and 8.0 g/cm3.
Calculated from the dimensions as the standard gives them, with no allowance for tolerance.

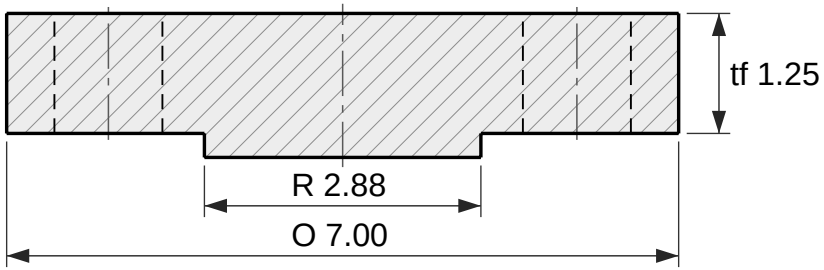

Section

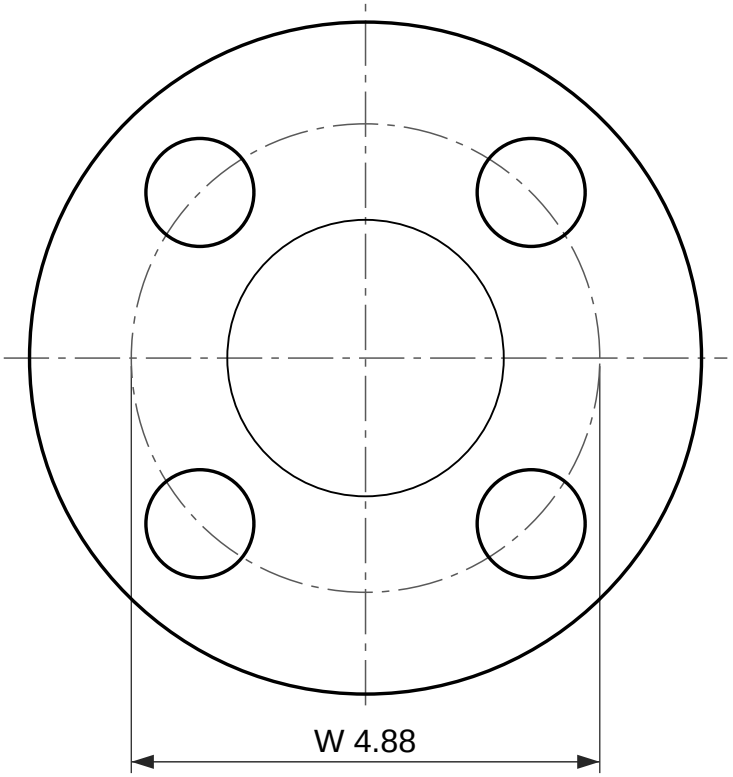

4 holes Ø1.12

Face view

Blind flange, ASME B16.5 Class 900 RF

NPS 1-1/2 (DN 40)

Dimensions per ASME B16.5-2025, inches and millimetres as the standard's own tables give them. Note 5 of the Class 900 table: use the Class 1500 dimensions in this size.
tf is the ASME B16.5 dimension, measured without the 0.25 in (6.4 mm) raised face; the tf + f row is the same flange measured over the face, which is what most catalogs print.
ASME B16.5 gives Class 900 the same dimensions as Class 1500 in NPS 1-1/2; only the marking differs.
Reference drawing. The purchase order and ASME B16.5 govern. Check the latest edition.
Generated at rajendradatacenter.us/flanges/high-pressure/

Dimension	in	mm
O Outside diameter	7.00	178
R Raised face diameter	2.88	73
f Raised face height	0.25	6.4
tf Thickness (min), without raised face	1.25	31.8
tf + f Thickness over the raised face	1.50	38.2
W Bolt circle diameter	4.88	124
h Bolt holes, 4 off	1.12	28.6

4 stud bolts of 1 in; holes 1.12 in (28.6 mm)

RAJENDRA INDUSTRIAL CORPORATION

rajendradatacenter.us
Drawing RIC-B165-BL900-1.5
Scale 1:2 on Letter
Units: inches (mm)
Date 2026-11-22
Quote: rajendradatacenter.us/rfq/
sales@rajendradatacenter.com
+91 74338 71355