Approx. weight

Material	lb	kg
Carbon steel	906	411
Stainless steel 304 and 304L	912	414
Stainless steel 316 and 316L	923	419

Densities 7.85, 7.9 and 8.0 g/cm3.
Calculated from the dimensions as the standard gives them, with no allowance for tolerance.

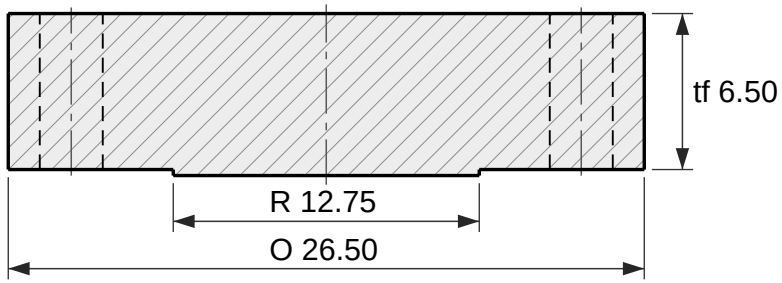

Section

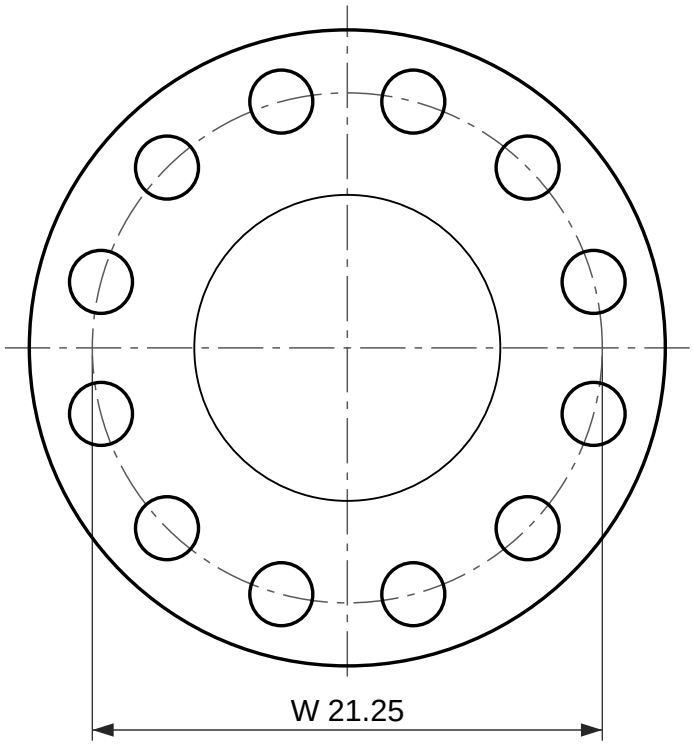

12 holes Ø2.62

Face view

Blind flange, ASME B16.5 Class 2500 RF

NPS 10 (DN 250)

Dimensions per ASME B16.5-2025, inches and millimetres as the standard's own tables give them.
tf is the ASME B16.5 dimension, measured without the 0.25 in (6.4 mm) raised face; the tf + f row is the same flange measured over the face, which is what most catalogs print.
Reference drawing. The purchase order and ASME B16.5 govern. Check the latest edition.
Generated at rajendradatacenter.us/flanges/high-pressure/

Dimension	in	mm
O Outside diameter	26.50	673
R Raised face diameter	12.75	323.8
f Raised face height	0.25	6.4
tf Thickness (min), without raised face	6.50	165.1
tf + f Thickness over the raised face	6.75	171.5
W Bolt circle diameter	21.25	539.8
h Bolt holes, 12 off	2.62	66.7

12 stud bolts of 2-1/2 in; holes 2.62 in (66.7 mm)

RAJENDRA INDUSTRIAL CORPORATION

rajendradatacenter.us
Drawing RIC-B165-BL2500-10
Scale 1:8 on Letter
Units: inches (mm)
Date 2026-11-22
Quote: rajendradatacenter.us/rfq/
sales@rajendradatacenter.com
+91 74338 71355