Approx. weight

Material	lb	kg
Carbon steel	1231	558
Stainless steel 304 and 304L	1238	562
Stainless steel 316 and 316L	1254	569

Densities 7.85, 7.9 and 8.0 g/cm3.
Calculated from the dimensions as the standard gives them, with no allowance for tolerance.

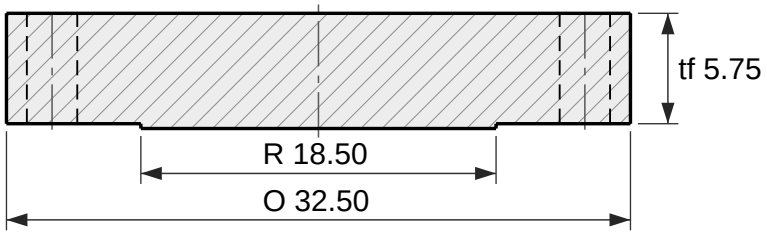

Section

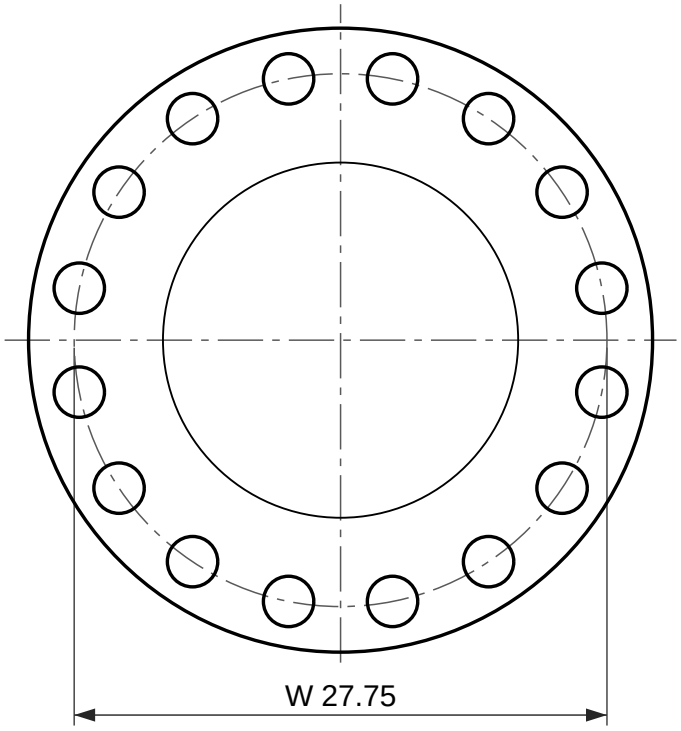

16 holes Ø2.62

Face view

Blind flange, ASME B16.5 Class 1500 RF

NPS 16 (DN 400)

Dimensions per ASME B16.5-2025, inches and millimetres as the standard's own tables give them.
tf is the ASME B16.5 dimension, measured without the 0.25 in (6.4 mm) raised face; the tf + f row is the same flange measured over the face, which is what most catalogs print.
Reference drawing. The purchase order and ASME B16.5 govern. Check the latest edition.
Generated at rajendradatacenter.us/flanges/high-pressure/

Dimension	in	mm
O Outside diameter	32.50	826
R Raised face diameter	18.50	469.9
f Raised face height	0.25	6.4
tf Thickness (min), without raised face	5.75	146
tf + f Thickness over the raised face	6.00	152.4
W Bolt circle diameter	27.75	704.8
h Bolt holes, 16 off	2.62	66.7

16 stud bolts of 2-1/2 in; holes 2.62 in (66.7 mm)

RAJENDRA INDUSTRIAL CORPORATION
rajendradatacenter.us
Drawing RIC-B165-BL1500-16
Scale 1:10 on Letter
Units: inches (mm)
Date 2026-11-22
Quote: rajendradatacenter.us/rfq/
sales@rajendradatacenter.com
+91 74338 71355