

Flanges for US industry and data center cooling

Flange handbook: dimensions, bolting and weights

Every ASME B16.5 class from 150 to 2500, NPS 1/2 to 24, with the stud bolt chart, with approximate weights in carbon steel and stainless steel 316L. Inches and pounds.

Rajendra Industrial Corporation, Umbergaon, India. Edition of 8 November 2026. A drawing of every flange in these tables, 2509 in all, is free at rajendradatacenter.us.

In this handbook

01 ASME B16.5 Class 150
02 ASME B16.5 Class 300
03 ASME B16.5 Class 400
04 ASME B16.5 Class 600
05 ASME B16.5 Class 900
06 ASME B16.5 Class 1500
07 ASME B16.5 Class 2500
08 Stud bolts
09 Pipe walls by schedule

rajendradatacenter.us
Stainless and carbon steel flanges, made in India since 2000

sales@rajendradatacenter.com
+91 74338 71355 (phone and WhatsApp)
ISO 9001:2015, PED 2014/68/EU, NORSOK M-650, ISO 45001:2018, ISO 29001:2020

How to read these tables

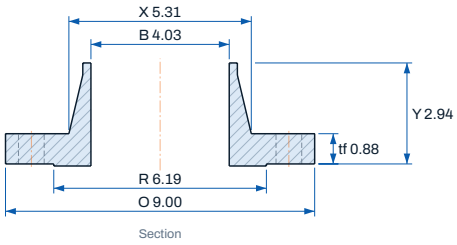

Section

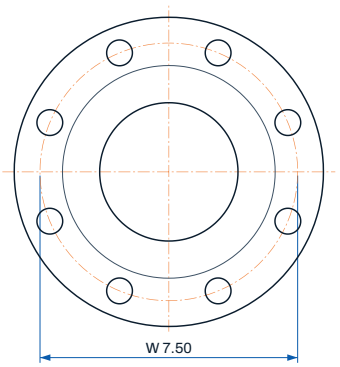

Face view

O	Outside diameter of the flange	**tf**	Flange thickness, minimum, as ASME B16.5 gives it: without the raised face
R	Raised face diameter	**X**	Hub diameter at the back of the flange
A	Hub diameter at the weld end (weld neck)	**Y**	Length through hub, without the raised face
B	Bore (slip-on); a weld neck's bore matches the pipe	**W**	Bolt circle diameter

ASME B16.5 has measured tf and Y without the raised face since 2003, so a flange is 1.5 mm (0.06 in) thicker over the face in Class 150 and 300, and 6.4 mm (0.25 in) thicker in Class 400 and above. Catalogs that prir

Dimensions are those of ASME B16.5, as published on rajendradatacenter.us and checked value by value against independent tables; the standard governs. Inch values are the standard's. Weights are calculated from the section of each flange, less the bolt holes, with the ASME thickness at the top of its tolerance (+3 mm, 0.12 in, to NPS 18; +5 mm, 0.19 in, from NPS 20) and the EN dimensions as given; carbon steel 7.85 g/cm³, stainless 316L 8.0 g/cm³ (304L weighs about 1% less than 316L). Blank cells: the type is not made in that class and size.

ASME B16.5

Class 150

Class 150 dimensions, in; raised face 0.06 in high, not included in tf or Y

NPS	DN	O	tf	R	X	A	Y WN	Y SO	Y LJ	B SO	W	Holes	Bolt, in
1/2	15	3.50	0.38	1.38	1.19	0.84	1.81	0.56	0.62	0.88	2.38	4	1/2
3/4	20	3.88	0.44	1.69	1.50	1.05	2.00	0.56	0.62	1.09	2.75	4	1/2
1	25	4.25	0.50	2.00	1.94	1.31	2.12	0.62	0.69	1.36	3.12	4	1/2
1-1/4	32	4.62	0.56	2.50	2.31	1.66	2.19	0.75	0.81	1.70	3.50	4	1/2
1-1/2	40	5.00	0.62	2.88	2.56	1.90	2.38	0.81	0.88	1.95	3.88	4	1/2
2	50	6.00	0.69	3.62	3.06	2.38	2.44	0.94	1.00	2.44	4.75	4	5/8
2-1/2	65	7.00	0.81	4.12	3.56	2.88	2.69	1.06	1.12	2.94	5.50	4	5/8
3	80	7.50	0.88	5.00	4.25	3.50	2.69	1.12	1.19	3.57	6.00	4	5/8
4	100	9.00	0.88	6.19	5.31	4.50	2.94	1.25	1.31	4.57	7.50	8	5/8
5	125	10.00	0.88	7.31	6.44	5.56	3.44	1.38	1.44	5.66	8.50	8	3/4
6	150	11.00	0.94	8.50	7.56	6.63	3.44	1.50	1.56	6.72	9.50	8	3/4
8	200	13.50	1.06	10.62	9.69	8.63	3.94	1.69	1.75	8.72	11.75	8	3/4
10	250	16.00	1.12	12.75	12.00	10.75	3.94	1.88	1.94	10.88	14.25	12	7/8
12	300	19.00	1.19	15.00	14.38	12.75	4.44	2.12	2.19	12.88	17.00	12	7/8
14	350	21.00	1.31	16.25	15.75	14.00	4.94	2.19	3.12	14.14	18.75	12	1
16	400	23.50	1.38	18.50	18.00	16.00	4.94	2.44	3.44	16.16	21.25	16	1
18	450	25.00	1.50	21.00	19.88	18.00	5.44	2.62	3.81	18.18	22.75	16	1 1/8
20	500	27.50	1.62	23.00	22.00	20.00	5.62	2.81	4.06	20.20	25.00	20	1 1/8
24	600	32.00	1.81	27.25	26.12	24.00	5.94	3.19	4.38	24.25	29.50	20	1 1/4

Class 150 approximate weights, lb per flange, carbon steel and stainless steel 316 and 316L

NPS	DN	Weld neck, STD bore		Slip-on		Blind		Lap joint	
		CS	316L	CS	316L	CS	316L	CS	316L
1/2	15	1.1	1.1	0.9	0.9	0.9	0.9	1.0	1.0
3/4	20	1.6	1.6	1.3	1.3	1.4	1.4	1.4	1.4
1	25	2.3	2.3	1.7	1.7	1.9	1.9	1.9	1.9
1-1/4	32	3.0	3.0	2.3	2.3	2.6	2.6	2.4	2.4
1-1/2	40	3.8	3.9	2.9	2.9	3.3	3.4	3.0	3.1
2	50	5.8	5.9	4.6	4.6	5.4	5.5	4.7	4.8
2-1/2	65	9.1	9.3	7.2	7.3	8.7	8.8	7.5	7.6
3	80	11.0	11.2	8.5	8.7	10.9	11.1	8.6	8.7
4	100	15.4	15.7	11.7	12.0	15.5	15.8	11.7	11.9
5	125	19.4	19.8	13.5	13.7	19.1	19.5	13.3	13.5
6	150	23.9	24.3	16.5	16.8	25.0	25.5	15.9	16.2
8	200	39.5	40.2	26.6	27.1	43.1	43.9	26.0	26.5
10	250	53.9	54.9	36.3	37.0	63.0	64.2	35.7	36.4
12	300	82.9	84.4	57.8	58.9	95.5	97.3	57.3	58.3
14	350	109	111	76.2	77.7	128	130	85.3	87.0
16	400	136	139	99.2	101	168	171	112	114
18	450	154	157	108	110	206	210	123	125
20	500	190	193	136	139	269	274	155	158
24	600	259	264	192	195	408	415	216	220

ASME B16.5

Class 300

Class 300 dimensions, in; raised face 0.06 in high, not included in tf or Y

NPS	DN	O	tf	R	X	A	Y WN	Y SO	Y LJ	B SO	W	Holes	Bolt, in
1/2	15	3.75	0.50	1.38	1.50	0.84	2.00	0.81	0.88	0.88	2.62	4	1/2
3/4	20	4.62	0.56	1.69	1.88	1.05	2.19	0.94	1.00	1.09	3.25	4	5/8
1	25	4.88	0.62	2.00	2.12	1.31	2.38	1.00	1.06	1.36	3.50	4	5/8
1-1/4	32	5.25	0.69	2.50	2.50	1.66	2.50	1.00	1.06	1.70	3.88	4	5/8
1-1/2	40	6.12	0.75	2.88	2.75	1.90	2.63	1.13	1.19	1.95	4.50	4	3/4
2	50	6.50	0.81	3.62	3.31	2.38	2.69	1.25	1.31	2.44	5.00	8	5/8
2-1/2	65	7.50	0.94	4.12	3.94	2.88	2.94	1.44	1.50	2.94	5.88	8	3/4
3	80	8.25	1.06	5.00	4.62	3.50	3.06	1.63	1.69	3.57	6.62	8	3/4
4	100	10.00	1.19	6.19	5.75	4.50	3.32	1.82	1.88	4.57	7.88	8	3/4
5	125	11.00	1.31	7.31	7.00	5.56	3.82	1.94	2.00	5.66	9.25	8	3/4
6	150	12.50	1.38	8.50	8.12	6.63	3.82	2.00	2.06	6.72	10.62	12	3/4
8	200	15.00	1.56	10.62	10.25	8.63	4.32	2.38	2.44	8.72	13.00	12	7/8
10	250	17.50	1.81	12.75	12.62	10.75	4.56	2.56	3.75	10.88	15.25	16	1
12	300	20.50	1.94	15.00	14.75	12.75	5.06	2.82	4.00	12.88	17.75	16	1 1/8
14	350	23.00	2.06	16.25	16.75	14.00	5.56	2.94	4.38	14.14	20.25	20	1 1/8
16	400	25.50	2.19	18.50	19.00	16.00	5.69	3.19	4.75	16.16	22.50	20	1 1/4
18	450	28.00	2.31	21.00	21.00	18.00	6.19	3.44	5.12	18.18	24.75	24	1 1/4
20	500	30.50	2.44	23.00	23.12	20.00	6.32	3.69	5.50	20.20	27.00	24	1 1/4
24	600	36.00	2.69	27.25	27.62	24.00	6.56	4.13	6.00	24.25	32.00	24	1 1/2

Class 300 approximate weights, lb per flange, carbon steel and stainless steel 316 and 316L

NPS	DN	Weld neck, STD bore		Slip-on		Blind		Lap joint	
		CS	316L	CS	316L	CS	316L	CS	316L
1/2	15	1.7	1.7	1.4	1.5	1.4	1.4	1.6	1.6
3/4	20	2.8	2.9	2.5	2.5	2.4	2.5	2.7	2.7
1	25	3.5	3.6	3.0	3.0	3.0	3.1	3.2	3.3
1-1/4	32	4.5	4.6	3.7	3.8	4.0	4.0	3.9	4.0
1-1/2	40	6.5	6.6	5.5	5.6	5.9	6.0	5.7	5.9
2	50	7.6	7.7	6.3	6.4	7.0	7.1	6.5	6.7
2-1/2	65	11.6	11.8	9.6	9.7	10.7	10.9	9.8	10.0
3	80	15.5	15.8	12.9	13.1	15.0	15.2	13.0	13.2
4	100	25.2	25.7	21.3	21.7	25.4	25.9	21.4	21.8
5	125	33.7	34.3	26.8	27.4	34.2	34.9	27.0	27.5
6	150	43.2	44.0	34.6	35.2	46.2	47.1	34.4	35.1
8	200	67.1	68.4	53.4	54.4	75.5	77.0	53.2	54.2
10	250	96.3	98.2	75.0	76.4	117	120	85.0	86.6
12	300	139	142	110	112	174	177	122	125
14	350	194	197	153	156	232	236	178	182
16	400	241	245	195	198	303	309	228	233
18	450	297	302	239	244	386	393	280	286
20	500	359	366	296	302	488	497	345	351
24	600	519	529	444	453	748	763	518	528

ASME B16.5

Class 400

Class 400 dimensions, in; raised face 0.25 in high, not included in tf or Y

NPS	DN	O	tf	R	X	A	Y WN	Y SO	Y LJ	B SO	W	Holes	Bolt, in
1/2	15	3.75	0.56	1.38	1.50	0.84	2.06	0.88	0.88	0.88	2.62	4	1/2
3/4	20	4.62	0.62	1.69	1.88	1.05	2.25	1.00	1.00	1.09	3.25	4	5/8
1	25	4.88	0.69	2.00	2.12	1.31	2.44	1.06	1.06	1.36	3.50	4	5/8
1-1/4	32	5.25	0.81	2.50	2.50	1.66	2.62	1.12	1.12	1.70	3.88	4	5/8
1-1/2	40	6.12	0.88	2.88	2.75	1.90	2.75	1.25	1.25	1.95	4.50	4	3/4
2	50	6.50	1.00	3.62	3.31	2.38	2.88	1.44	1.44	2.44	5.00	8	5/8
2-1/2	65	7.50	1.12	4.12	3.94	2.88	3.12	1.62	1.62	2.94	5.88	8	3/4
3	80	8.25	1.25	5.00	4.62	3.50	3.25	1.81	1.81	3.57	6.62	8	3/4
4	100	10.00	1.38	6.19	5.75	4.50	3.50	2.00	2.00	4.57	7.88	8	7/8
5	125	11.00	1.50	7.31	7.00	5.56	4.00	2.12	2.12	5.66	9.25	8	7/8
6	150	12.50	1.62	8.50	8.12	6.63	4.06	2.25	2.25	6.72	10.62	12	7/8
8	200	15.00	1.88	10.62	10.25	8.63	4.62	2.69	2.69	8.72	13.00	12	1
10	250	17.50	2.12	12.75	12.62	10.75	4.88	2.88	4.00	10.88	15.25	16	1 1/8
12	300	20.50	2.25	15.00	14.75	12.75	5.38	3.12	4.25	12.88	17.75	16	1 1/4
14	350	23.00	2.38	16.25	16.75	14.00	5.88	3.31	4.62	14.14	20.25	20	1 1/4
16	400	25.50	2.50	18.50	19.00	16.00	6.00	3.69	5.00	16.16	22.50	20	1 3/8
18	450	28.00	2.62	21.00	21.00	18.00	6.50	3.88	5.38	18.18	24.75	24	1 3/8
20	500	30.50	2.75	23.00	23.12	20.00	6.62	4.00	5.75	20.20	27.00	24	1 1/2
24	600	36.00	3.00	27.25	27.62	24.00	6.88	4.50	6.25	24.25	32.00	24	1 3/4

Class 400 approximate weights, lb per flange, carbon steel and stainless steel 316 and 316L

NPS	DN	Weld neck, STD bore		Slip-on		Blind		Lap joint	
		CS	316L	CS	316L	CS	316L	CS	316L
1/2	15	1.9	1.9	1.6	1.7	1.7	1.7	1.6	1.6
3/4	20	3.1	3.2	2.8	2.8	2.8	2.8	2.7	2.7
1	25	4.0	4.0	3.4	3.4	3.5	3.6	3.2	3.3
1-1/4	32	5.3	5.4	4.5	4.5	4.9	5.0	4.2	4.3
1-1/2	40	7.6	7.8	6.6	6.7	7.2	7.3	6.2	6.3
2	50	9.4	9.6	8.0	8.1	9.1	9.3	7.4	7.5
2-1/2	65	13.8	14.1	11.6	11.8	13.4	13.7	10.9	11.1
3	80	18.4	18.7	15.5	15.7	18.6	19.0	14.4	14.7
4	100	28.9	29.4	24.5	25.0	30.4	31.0	22.9	23.3
5	125	38.0	38.7	30.6	31.2	40.7	41.5	28.6	29.2
6	150	49.6	50.5	40.2	40.9	56.1	57.1	37.5	38.2
8	200	78.4	79.9	63.3	64.5	94.1	95.9	59.7	60.9
10	250	110	112	86.3	87.9	142	145	91.7	93.5
12	300	157	160	126	128	208	212	133	135
14	350	217	221	175	178	275	280	192	195
16	400	268	273	223	227	356	363	244	249
18	450	328	334	270	275	451	459	298	303
20	500	390	397	323	329	560	571	360	367
24	600	562	573	484	493	851	867	540	550

ASME B16.5

Class 600

Class 600 dimensions, in; raised face 0.25 in high, not included in tf or Y

NPS	DN	O	tf	R	X	A	Y WN	Y SO	Y LJ	B SO	W	Holes	Bolt, in
1/2	15	3.75	0.56	1.38	1.50	0.84	2.06	0.88	0.88	0.88	2.62	4	1/2
3/4	20	4.62	0.62	1.69	1.88	1.05	2.25	1.00	1.00	1.09	3.25	4	5/8
1	25	4.88	0.69	2.00	2.12	1.31	2.44	1.06	1.06	1.36	3.50	4	5/8
1-1/4	32	5.25	0.81	2.50	2.50	1.66	2.62	1.12	1.12	1.70	3.88	4	5/8
1-1/2	40	6.12	0.88	2.88	2.75	1.90	2.75	1.25	1.25	1.95	4.50	4	3/4
2	50	6.50	1.00	3.62	3.31	2.38	2.88	1.44	1.44	2.44	5.00	8	5/8
2-1/2	65	7.50	1.12	4.12	3.94	2.88	3.12	1.62	1.62	2.94	5.88	8	3/4
3	80	8.25	1.25	5.00	4.62	3.50	3.25	1.81	1.81	3.57	6.62	8	3/4
4	100	10.75	1.50	6.19	6.00	4.50	4.00	2.12	2.12	4.57	8.50	8	7/8
5	125	13.00	1.75	7.31	7.44	5.56	4.50	2.38	2.38	5.66	10.50	8	1
6	150	14.00	1.88	8.50	8.75	6.63	4.62	2.62	2.62	6.72	11.50	12	1
8	200	16.50	2.19	10.62	10.75	8.63	5.25	3.00	3.00	8.72	13.75	12	1 1/8
10	250	20.00	2.50	12.75	13.50	10.75	6.00	3.38	4.38	10.88	17.00	16	1 1/4
12	300	22.00	2.62	15.00	15.75	12.75	6.12	3.62	4.62	12.88	19.25	20	1 1/4
14	350	23.75	2.75	16.25	17.00	14.00	6.50	3.69	5.00	14.14	20.75	20	1 3/8
16	400	27.00	3.00	18.50	19.50	16.00	7.00	4.19	5.50	16.16	23.75	20	1 1/2
18	450	29.25	3.25	21.00	21.50	18.00	7.25	4.62	6.00	18.18	25.75	20	1 5/8
20	500	32.00	3.50	23.00	24.00	20.00	7.50	5.00	6.50	20.20	28.50	24	1 5/8
24	600	37.00	4.00	27.25	28.25	24.00	8.00	5.50	7.25	24.25	33.00	24	1 7/8

Class 600 approximate weights, lb per flange, carbon steel and stainless steel 316 and 316L

NPS	DN	Weld neck, STD bore		Slip-on		Blind		Lap joint	
		CS	316L	CS	316L	CS	316L	CS	316L
1/2	15	1.9	1.9	1.6	1.7	1.7	1.7	1.6	1.6
3/4	20	3.1	3.2	2.8	2.8	2.8	2.8	2.7	2.7
1	25	4.0	4.0	3.4	3.4	3.5	3.6	3.2	3.3
1-1/4	32	5.3	5.4	4.5	4.5	4.9	5.0	4.2	4.3
1-1/2	40	7.6	7.8	6.6	6.7	7.2	7.3	6.2	6.3
2	50	9.4	9.6	8.0	8.1	9.1	9.3	7.4	7.5
2-1/2	65	13.8	14.1	11.6	11.8	13.4	13.7	10.9	11.1
3	80	18.4	18.7	15.5	15.7	18.6	19.0	14.4	14.7
4	100	37.6	38.3	32.0	32.6	38.1	38.8	30.4	31.0
5	125	63.1	64.3	53.9	54.9	64.9	66.1	51.9	52.9
6	150	74.9	76.4	63.5	64.7	79.7	81.3	60.8	62.0
8	200	115	117	95.7	97.6	130	132	92.1	93.9
10	250	188	191	155	158	215	219	164	167
12	300	224	229	185	189	273	278	197	201
14	350	266	272	218	222	333	339	237	241
16	400	372	379	313	319	471	480	340	347
18	450	446	454	382	389	600	611	413	421
20	500	557	567	486	495	770	785	529	540
24	600	783	798	689	702	1176	1198	759	773

ASME B16.5

Class 900

Class 900 dimensions, in; raised face 0.25 in high, not included in tf or Y

NPS	DN	O	tf	R	X	A	Y WN	Y SO	Y LJ	B SO	W	Holes	Bolt, in
1/2	15	4.75	0.88	1.38	1.50	0.84	2.38	1.25	1.25	0.88	3.25	4	3/4
3/4	20	5.12	1.00	1.69	1.75	1.05	2.75	1.38	1.38	1.09	3.50	4	3/4
1	25	5.88	1.12	2.00	2.06	1.31	2.88	1.62	1.62	1.36	4.00	4	7/8
1-1/4	32	6.25	1.12	2.50	2.50	1.66	2.88	1.62	1.62	1.70	4.38	4	7/8
1-1/2	40	7.00	1.25	2.88	2.75	1.90	3.25	1.75	1.75	1.95	4.88	4	1
2	50	8.50	1.50	3.62	4.12	2.38	4.00	2.25	2.25	2.44	6.50	8	7/8
2-1/2	65	9.62	1.62	4.12	4.88	2.88	4.12	2.50	2.50	2.94	7.50	8	1
3	80	9.50	1.50	5.00	5.00	3.50	4.00	2.12	2.12	3.57	7.50	8	7/8
4	100	11.50	1.75	6.19	6.25	4.50	4.50	2.75	2.75	4.57	9.25	8	1 1/8
5	125	13.75	2.00	7.31	7.50	5.56	5.00	3.12	3.12	5.66	11.00	8	1 1/4
6	150	15.00	2.19	8.50	9.25	6.63	5.50	3.38	3.38	6.72	12.50	12	1 1/8
8	200	18.50	2.50	10.62	11.75	8.63	6.38	4.00	4.50	8.72	15.50	12	1 3/8
10	250	21.50	2.75	12.75	14.50	10.75	7.25	4.25	5.00	10.88	18.50	16	1 3/8
12	300	24.00	3.12	15.00	16.50	12.75	7.88	4.62	5.62	12.88	21.00	20	1 3/8
14	350	25.25	3.38	16.25	17.75	14.00	8.38	5.12	6.12	14.14	22.00	20	1 1/2
16	400	27.75	3.50	18.50	20.00	16.00	8.50	5.25	6.50	16.16	24.25	20	1 5/8
18	450	31.00	4.00	21.00	22.25	18.00	9.00	6.00	7.50	18.18	27.00	20	1 7/8
20	500	33.75	4.25	23.00	24.50	20.00	9.75	6.25	8.25	20.20	29.50	20	2
24	600	41.00	5.50	27.25	29.50	24.00	11.50	8.00	10.50	24.25	35.50	20	2 1/2

Class 900 approximate weights, lb per flange, carbon steel and stainless steel 316 and 316L

NPS	DN	Weld neck, STD bore		Slip-on		Blind		Lap joint	
		CS	316L	CS	316L	CS	316L	CS	316L
1/2	15	4.1	4.2	3.9	3.9	3.9	4.0	3.8	3.8
3/4	20	5.6	5.7	5.1	5.2	5.3	5.4	5.0	5.1
1	25	8.1	8.3	7.6	7.7	7.9	8.0	7.4	7.5
1-1/4	32	9.4	9.6	8.6	8.8	9.1	9.3	8.3	8.5
1-1/2	40	13.0	13.2	11.8	12.1	12.7	12.9	11.5	11.7
2	50	23.8	24.2	21.7	22.1	22.2	22.6	21.1	21.5
2-1/2	65	32.8	33.4	30.1	30.6	30.7	31.3	29.3	29.9
3	80	29.7	30.2	25.6	26.1	28.9	29.4	24.5	25.0
4	100	48.8	49.8	43.6	44.4	48.8	49.7	41.9	42.7
5	125	78.5	80.0	70.4	71.8	80.5	82.0	68.4	69.7
6	150	103	105	90.8	92.5	105	107	88.0	89.7
8	200	176	179	156	159	182	185	159	162
10	250	260	265	222	226	270	275	232	237
12	300	345	351	293	298	382	389	310	316
14	350	395	403	338	344	455	464	356	363
16	400	475	484	408	415	572	583	438	447
18	450	643	655	570	581	809	825	615	627
20	500	798	813	699	712	1022	1042	771	786
24	600	1466	1494	1336	1361	1932	1969	1481	1509

ASME B16.5

Class 1500

Class 1500 dimensions, in; raised face 0.25 in high, not included in tf or Y

NPS	DN	O	tf	R	X	A	Y WN	Y SO	Y LJ	B SO	W	Holes	Bolt, in
1/2	15	4.75	0.88	1.38	1.50	0.84	2.38	1.25	1.25	0.88	3.25	4	3/4
3/4	20	5.12	1.00	1.69	1.75	1.05	2.75	1.38	1.38	1.09	3.50	4	3/4
1	25	5.88	1.12	2.00	2.06	1.31	2.88	1.62	1.62	1.36	4.00	4	7/8
1-1/4	32	6.25	1.12	2.50	2.50	1.66	2.88	1.62	1.62	1.70	4.38	4	7/8
1-1/2	40	7.00	1.25	2.88	2.75	1.90	3.25	1.75	1.75	1.95	4.88	4	1
2	50	8.50	1.50	3.62	4.12	2.38	4.00	2.25	2.25	2.44	6.50	8	7/8
2-1/2	65	9.62	1.62	4.12	4.88	2.88	4.12	2.50	2.50	2.94	7.50	8	1
3	80	10.50	1.88	5.00	5.25	3.50	4.62		2.88		8.00	8	1 1/8
4	100	12.25	2.12	6.19	6.38	4.50	4.88		3.56		9.50	8	1 1/4
5	125	14.75	2.88	7.31	7.75	5.56	6.12		4.12		11.50	8	1 1/2
6	150	15.50	3.25	8.50	9.00	6.63	6.75		4.69		12.50	12	1 3/8
8	200	19.00	3.62	10.62	11.50	8.63	8.38		5.62		15.50	12	1 5/8
10	250	23.00	4.25	12.75	14.50	10.75	10.00		7.00		19.00	12	1 7/8
12	300	26.50	4.88	15.00	17.75	12.75	11.12		8.62		22.50	16	2
14	350	29.50	5.25	16.25	19.50	14.00	11.75		9.50		25.00	16	2 1/4
16	400	32.50	5.75	18.50	21.75	16.00	12.25		10.25		27.75	16	2 1/2
18	450	36.00	6.38	21.00	23.50	18.00	12.88		10.88		30.50	16	2 3/4
20	500	38.75	7.00	23.00	25.25	20.00	14.00		11.50		32.75	16	3
24	600	46.00	8.00	27.25	30.00	24.00	16.00		13.00		39.00	16	3 1/2

Class 1500 approximate weights, lb per flange, carbon steel and stainless steel 316 and 316L

NPS	DN	Weld neck, STD bore		Slip-on		Blind		Lap joint	
		CS	316L	CS	316L	CS	316L	CS	316L
1/2	15	4.1	4.2	3.9	3.9	3.9	4.0	3.8	3.8
3/4	20	5.6	5.7	5.1	5.2	5.3	5.4	5.0	5.1
1	25	8.1	8.3	7.6	7.7	7.9	8.0	7.4	7.5
1-1/4	32	9.4	9.6	8.6	8.8	9.1	9.3	8.3	8.5
1-1/2	40	13.0	13.2	11.8	12.1	12.7	12.9	11.5	11.7
2	50	23.8	24.2	21.7	22.1	22.2	22.6	21.1	21.5
2-1/2	65	32.8	33.4	30.1	30.6	30.7	31.3	29.3	29.9
3	80	43.4	44.2			42.3	43.1	38.5	39.2
4	100	65.0	66.2			65.9	67.1	59.5	60.6
5	125	124	126			129	131	112	114
6	150	148	150			158	161	132	134
8	200	251	256			268	273	223	228
10	250	437	446			464	473	397	404
12	300	653	666			697	711	625	637
14	350	861	877			927	945	845	861
16	400	1095	1116			1231	1254	1085	1106
18	450	1427	1454			1678	1710	1402	1429
20	500	1744	1777			2127	2168	1683	1716
24	600	2773	2826			3437	3503	2692	2744

ASME B16.5

Class 2500

Class 2500 dimensions, in; raised face 0.25 in high, not included in tf or Y

NPS	DN	O	tf	R	X	A	Y WN	Y SO	Y LJ	B SO	W	Holes	Bolt, in
1/2	15	5.25	1.19	1.38	1.69	0.84	2.88		1.56		3.50	4	3/4
3/4	20	5.50	1.25	1.69	2.00	1.05	3.12		1.69		3.75	4	3/4
1	25	6.25	1.38	2.00	2.25	1.31	3.50		1.88		4.25	4	7/8
1-1/4	32	7.25	1.50	2.50	2.88	1.66	3.75		2.06		5.12	4	1
1-1/2	40	8.00	1.75	2.88	3.12	1.90	4.38		2.38		5.75	4	1 1/8
2	50	9.25	2.00	3.62	3.75	2.38	5.00		2.75		6.75	8	1
2-1/2	65	10.50	2.25	4.12	4.50	2.88	5.62		3.12		7.75	8	1 1/8
3	80	12.00	2.62	5.00	5.25	3.50	6.62		3.62		9.00	8	1 1/4
4	100	14.00	3.00	6.19	6.50	4.50	7.50		4.25		10.75	8	1 1/2
5	125	16.50	3.62	7.31	8.00	5.56	9.00		5.12		12.75	8	1 3/4
6	150	19.00	4.25	8.50	9.25	6.63	10.75		6.00		14.50	8	2
8	200	21.75	5.00	10.62	12.00	8.63	12.50		7.00		17.25	12	2
10	250	26.50	6.50	12.75	14.75	10.75	16.50		9.00		21.25	12	2 1/2
12	300	30.00	7.25	15.00	17.38	12.75	18.25		10.00		24.38	12	2 3/4

Class 2500 approximate weights, lb per flange, carbon steel and stainless steel 316 and 316L

NPS	DN	Weld neck, STD bore		Slip-on		Blind		Lap joint	
		CS	316L	CS	316L	CS	316L	CS	316L
1/2	15	6.9	7.0			6.6	6.7	6.4	6.6
3/4	20	8.1	8.3			7.7	7.9	7.5	7.6
1	25	11.5	11.7			11.0	11.2	10.5	10.7
1-1/4	32	17.0	17.3			16.2	16.5	15.5	15.8
1-1/2	40	23.8	24.3			23.0	23.4	21.7	22.2
2	50	35.4	36.1			34.3	35.0	32.1	32.7
2-1/2	65	51.9	52.9			49.9	50.9	46.6	47.5
3	80	78.9	80.4			76.6	78.1	70.6	71.9
4	100	121	123			119	121	108	110
5	125	202	206			200	204	181	184
6	150	312	318			312	318	279	284
8	200	469	478			473	482	410	418
10	250	893	910			906	923	778	792
12	300	1268	1292			1306	1331	1105	1126

ASME B16.5

Stud bolts

Number, diameter and length of stud bolts for each class and size, for raised face (0.06 in face in Class 150 and 300, 0.25 in from Class 400) and ring type joint flanges, without the points. From Class 400 the ring joint stud is the shorter one, because the 0.25 in raised face stands taller than the gap a ring joint leaves. Bolt circle and hole in inches.

Class 150 stud bolts, in

NPS	Studs	Diameter	Bolt circle	Hole	Length RF	Length RTJ
1/2	4	1/2	2.38	5/8	2.25	
3/4	4	1/2	2.75	5/8	2.5	
1	4	1/2	3.12	5/8	2.5	3
1 1/4	4	1/2	3.5	5/8	2.75	3.25
1 1/2	4	1/2	3.88	5/8	2.75	3.25
2	4	5/8	4.75	3/4	3.25	3.75
2 1/2	4	5/8	5.5	3/4	3.5	4
3	4	5/8	6	3/4	3.5	4
4	8	5/8	7.5	3/4	3.5	4
5	8	3/4	8.5	7/8	3.75	4.25
6	8	3/4	9.5	7/8	4	4.5
8	8	3/4	11.75	7/8	4.25	4.75
10	12	7/8	14.25	1	4.5	5
12	12	7/8	17	1	4.75	5.25
14	12	1	18.75	1 1/8	5.25	5.75
16	16	1	21.25	1 1/8	5.25	5.75
18	16	1 1/8	22.75	1 1/4	5.75	6.25
20	20	1 1/8	25	1 1/4	6.25	6.75
24	20	1 1/4	29.5	1 3/8	6.75	7.25

Class 300 stud bolts, in

NPS	Studs	Diameter	Bolt circle	Hole	Length RF	Length RTJ
1/2	4	1/2	2.62	5/8	2.5	3
3/4	4	5/8	3.25	3/4	3	3.5
1	4	5/8	3.5	3/4	3	3.5
1 1/4	4	5/8	3.88	3/4	3.25	3.75
1 1/2	4	3/4	4.5	7/8	3.5	4
2	8	5/8	5	3/4	3.5	4
2 1/2	8	3/4	5.88	7/8	4	4.5
3	8	3/4	6.62	7/8	4.25	4.75
4	8	3/4	7.88	7/8	4.5	5
5	8	3/4	9.25	7/8	4.75	5.25
6	12	3/4	10.62	7/8	4.75	5.5
8	12	7/8	13	1	5.5	6
10	16	1	15.25	1 1/8	6.25	6.75
12	16	1 1/8	17.75	1 1/4	6.75	7.25
14	20	1 1/8	20.25	1 1/4	7	7.5
16	20	1 1/4	22.5	1 3/8	7.5	8
18	24	1 1/4	24.75	1 3/8	7.75	8.25
20	24	1 1/4	27	1 3/8	8	8.75
24	24	1 1/2	32	1 5/8	9	10

Class 400 stud bolts, in

NPS	Studs	Diameter	Bolt circle	Hole	Length RF	Length RTJ
4	8	7/8	7.88	1	5.5	5.25
5	8	7/8	9.25	1	5.75	5.25
6	12	7/8	10.62	1	6	5.75
8	12	1	13	1 1/8	6.75	6.5
10	16	1 1/8	15.25	1 1/4	7.5	7.25
12	16	1 1/4	17.75	1 3/8	8	7.75
14	20	1 1/4	20.25	1 3/8	8.25	8
16	20	1 3/8	22.5	1 1/2	8.75	8.5
18	24	1 3/8	24.75	1 1/2	9	8.75
20	24	1 1/2	27	1 5/8	9.5	9.25
24	24	1 3/4	32	1 7/8	10.5	10.25

Class 600 stud bolts, in

NPS	Studs	Diameter	Bolt circle	Hole	Length RF	Length RTJ
1/2	4	1/2	2.62	5/8	3	2.75
3/4	4	5/8	3.25	3/4	3.5	3.25
1	4	5/8	3.5	3/4	3.5	3.25
1 1/4	4	5/8	3.88	3/4	3.75	3.5
1 1/2	4	3/4	4.5	7/8	4.25	4
2	8	5/8	5	3/4	4.25	4
2 1/2	8	3/4	5.88	7/8	4.75	4.5
3	8	3/4	6.62	7/8	5	4.75
4	8	7/8	8.5	1	5.75	5.5
5	8	1	10.5	1 1/8	6.5	6.25
6	12	1	11.5	1 1/8	6.75	6.5
8	12	1 1/8	13.75	1 1/4	7.5	7.25
10	16	1 1/4	17	1 3/8	8.5	8.25
12	20	1 1/4	19.25	1 3/8	8.75	8.5
14	20	1 3/8	20.75	1 1/2	9.25	9
16	20	1 1/2	23.75	1 5/8	10	9.75
18	20	1 5/8	25.75	1 3/4	10.75	10.5
20	24	1 5/8	28.5	1 3/4	11.25	11
24	24	1 7/8	33	2	13	12.75

Class 900 stud bolts, in

NPS	Studs	Diameter	Bolt circle	Hole	Length RF	Length RTJ
3	8	7/8	7.5	1	5.75	5.5
4	8	1 1/8	9.25	1 1/4	6.75	6.5
5	8	1 1/4	11	1 3/8	7.5	7.25
6	12	1 1/8	12.5	1 1/4	7.5	7.25
8	12	1 3/8	15.5	1 1/2	8.75	8.5
10	16	1 3/8	18.5	1 1/2	9.25	9
12	20	1 3/8	21	1 1/2	10	9.75
14	20	1 1/2	22	1 5/8	10.75	10.5
16	20	1 5/8	24.25	1 3/4	11.25	11
18	20	1 7/8	27	2	12.75	12.5
20	20	2	29.5	2 1/8	13.75	13.5
24	20	2 1/2	35.5	2 5/8	17.25	17

Class 1500 stud bolts, in

NPS	Studs	Diameter	Bolt circle	Hole	Length RF	Length RTJ
1/2	4	3/4	3.25	7/8	4.25	4
3/4	4	3/4	3.5	7/8	4.5	4.25
1	4	7/8	4	1	5	4.75
1 1/4	4	7/8	4.38	1	5	4.75
1 1/2	4	1	4.88	1 1/8	5.5	5.25
2	8	7/8	6.5	1	5.75	5.5
2 1/2	8	1	7.5	1 1/8	6.25	6
3	8	1 1/8	8	1 1/4	7	6.75
4	8	1 1/4	9.5	1 3/8	7.75	7.5
5	8	1 1/2	11.5	1 5/8	9.75	9.5
6	12	1 3/8	12.5	1 1/2	10.25	10
8	12	1 5/8	15.5	1 3/4	11.5	11.25
10	12	1 7/8	19	2	13.25	13
12	16	2	22.5	2 1/8	14.75	14.5
14	16	2 1/4	25	2 3/8	16	15.75
16	16	2 1/2	27.75	2 5/8	17.5	17.25
18	16	2 3/4	30.5	2 7/8	19.5	19.25
20	16	3	32.75	3 1/8	21.25	21
24	16	3 1/2	39	3 5/8	24.25	24

Class 2500 stud bolts, in

NPS	Studs	Diameter	Bolt circle	Hole	Length RF	Length RTJ
1/2	4	3/4	3.5	7/8	4.75	4.5
3/4	4	3/4	3.75	7/8	5	4.75
1	4	7/8	4.25	1	5.5	5.25
1 1/4	4	1	5.12	1 1/8	6	5.75
1 1/2	4	1 1/8	5.75	1 1/4	6.75	6.5
2	8	1	6.75	1 1/8	7	6.75
2 1/2	8	1 1/8	7.75	1 1/4	7.75	7.5
3	8	1 1/4	9	1 3/8	8.75	8.5
4	8	1 1/2	10.75	1 5/8	10	9.75
5	8	1 3/4	12.75	1 7/8	11.75	11.5
6	8	2	14.5	2 1/8	13.5	13.25
8	12	2	17.25	2 1/8	15	14.75
10	12	2 1/2	21.25	2 5/8	19.25	19
12	12	2 3/4	24.38	2 7/8	21.25	21

ASME B36.10M and B36.19M

Pipe walls by schedule

The bore of a weld neck flange matches the pipe: B = A minus twice the wall. Stainless schedules end in S.

Pipe wall thickness, in, ASME B36.10M and B36.19M

NPS	Sch 5S	Sch 5	Sch 10S	Sch 10	Sch 20	Sch 30	Sch 40S	STD	Sch 40
1/2	0.065	0.065	0.083	0.083		0.095	0.109	0.109	0.109
3/4	0.065	0.065	0.083	0.083		0.095	0.113	0.113	0.113
1	0.065	0.065	0.109	0.109		0.114	0.133	0.133	0.133
1-1/4	0.065	0.065	0.109	0.109		0.117	0.140	0.140	0.140
1-1/2	0.065	0.065	0.109	0.109		0.125	0.145	0.145	0.145
2	0.065	0.065	0.109	0.109		0.125	0.154	0.154	0.154
2-1/2	0.083	0.083	0.120	0.120		0.188	0.203	0.203	0.203
3	0.083	0.083	0.120	0.120		0.188	0.216	0.216	0.216
4	0.083	0.083	0.120	0.120		0.188	0.237	0.237	0.237
5	0.109	0.109	0.134	0.134			0.258	0.258	0.258
6	0.109	0.109	0.134	0.134			0.280	0.280	0.280
8	0.109	0.109	0.148	0.148	0.250	0.277	0.322	0.322	0.322
10	0.134	0.134	0.165	0.165	0.250	0.307	0.365	0.365	0.365
12	0.156	0.156	0.180	0.180	0.250	0.330	0.375	0.375	0.406
14	0.156	0.156	0.188	0.250	0.312	0.375	0.375	0.375	0.438
16	0.165	0.165	0.188	0.250	0.312	0.375	0.375	0.375	0.500
18	0.165	0.165	0.188	0.250	0.312	0.438	0.375	0.375	0.562
20	0.188	0.188	0.218	0.250	0.375	0.500	0.375	0.375	0.594
24	0.218	0.218	0.250	0.250	0.375	0.562	0.375	0.375	0.688

Pipe wall thickness, in, ASME B36.10M and B36.19M

NPS	Sch 60	Sch 80S	XS	Sch 80	Sch 100	Sch 120	Sch 140	Sch 160	XXS
1/2		0.147	0.147	0.147				0.188	0.294
3/4		0.154	0.154	0.154				0.219	0.308
1		0.179	0.179	0.179				0.250	0.358
1-1/4		0.191	0.191	0.191				0.250	0.382
1-1/2		0.200	0.200	0.200				0.281	0.400
2		0.218	0.218	0.218				0.344	0.436
2-1/2		0.276	0.276	0.276				0.375	0.552
3		0.300	0.300	0.300				0.438	0.600
4		0.337	0.337	0.337		0.438		0.531	0.674
5		0.375	0.375	0.375		0.500		0.625	0.750
6		0.432	0.432	0.432		0.562		0.719	0.864
8	0.406	0.500	0.500	0.500	0.594	0.719	0.812	0.906	0.875
10	0.500	0.500	0.500	0.594	0.719	0.844	1.000	1.125	1.000
12	0.562	0.500	0.500	0.688	0.844	1.000	1.125	1.312	1.000
14	0.594	0.500	0.500	0.750	0.938	1.094	1.250	1.406	
16	0.656	0.500	0.500	0.844	1.031	1.219	1.438	1.594	
18	0.750	0.500	0.500	0.938	1.156	1.375	1.562	1.781	
20	0.812	0.500	0.500	1.031	1.281	1.500	1.750	1.969	
24	0.969	0.500	0.500	1.219	1.531	1.812	2.062	2.344	

About Rajendra Industrial Corporation

Rajendra Industrial Corporation (RIC) has made stainless steel and carbon steel flanges and forged fittings since 2000, at its works in Umbergaon, Gujarat, India. For US projects RIC supplies flanges to ASME and AWWA standards with mill test reports, for data center cooling and for industry.

Flanges	Weld neck, slip-on, blind, lap joint, socket weld, threaded and ring type joint flanges to ASME B16.5 (NPS 1/2 to 24, Class 150 to 2500), ASME B16.47 Series A and B, EN 1092-1 and AWWA C207 and C228
Materials	Stainless steel ASTM A182 F304, F304L, F316 and F316L; duplex UNS S32205 and super duplex UNS S32750; carbon steel ASTM A105 and A350 LF2
Works	Forging, heat treatment, pickling, machining on CNC lathes, vertical machining centers and conventional lathes, marking and testing in house at Umbergaon, Gujarat, India
Testing	Tensile, hardness, PMI, dye penetrant and dimensional checks in house; chemical, intergranular corrosion, impact and ultrasonic testing at outside laboratories
Documents	Mill test reports (MTRs) to EN 10204 3.1 or 3.2; third-party inspection by TÜV, Gulf Lloyds, IRClass, Bureau Veritas or SGS
Certificates	ISO 9001:2015, PED 2014/68/EU, NORSOK M-650, ISO 45001:2018, ISO 29001:2020

Ask for a quote or a drawing

Jinangg Doshiiy
sales@rajendradatacenter.com
+91 74338 71355 (phone and WhatsApp)
rajendradatacenter.us/rfq/

Works
Plot No. 199/4, 199/6 & L-605, GIDC, Opp. Balaji Weigh Bridge, Umbergaon, Dist. Valsad, Gujarat 396171, India

Head office
97/99, Shiv Vilas Building, 2nd Pathan Street, 5th Kumbharwada, Mumbai 400004, India

This guide is general technical information prepared by Rajendra Industrial Corporation from the sources it lists. It does not replace the governing standards, codes or your project specification, which take precedence; check the current edition of each standard before you design or order. The online version at rajendradatacenter.us is kept up to date. © 2026 Rajendra Industrial Corporation.